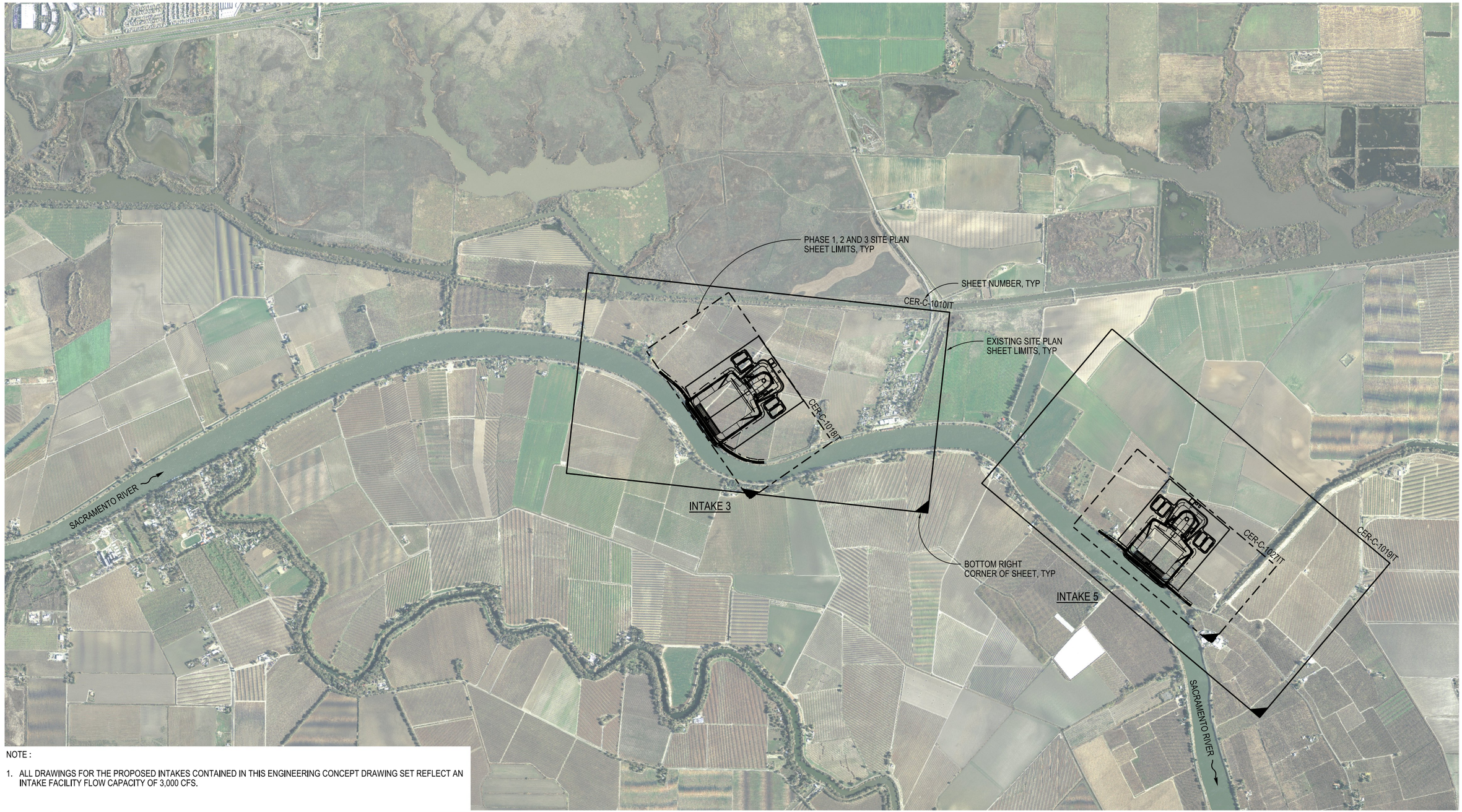

NOTE :

1. ALL DRAWINGS FOR THE PROPOSED INTAKES CONTAINED IN THIS ENGINEERING CONCEPT DRAWING SET REFLECT AN INTAKE FACILITY FLOW CAPACITY OF 3,000 CFS.

0 1200 2400
SCALE IN FEET

PLAN
1"=1200'

INTAKES

VERIFY SCALE
BAR IS ONE INCH ON ORIGINAL DRAWING.
0 1"

REV	DATE	DESCRIPTION	SUB.	APPD
	SEP 2024	DELTA CONVEYANCE PROJECT CONCEPT ENGINEERING REPORT DRAWINGS		

DESIGNED: J REYNOLDS
DRAWN: B CHELONIS
CHECKED: J JUNKERT
APPROVAL RECOMMENDED:
APPROVAL BY: A MURDOCK

CONCEPT PLANNING DOCUMENT

NOT FOR CONSTRUCTION

DELTA CONVEYANCE DESIGN & CONSTRUCTION AUTHORITY

DELTA CONVEYANCE PROJECT
CONCEPT ENGINEERING REPORT

INTAKES PROJECT OVERVIEW AND KEY MAP

PROJECT NO. W8X97000
SHEET NO. CER-C-0005IT
REV
SEQUENCE NO. 14

CER-C-0005IT_W8X97000.dgn

PLOT DATE:10/7/2024 PLOT TIME:3:28:35 PM

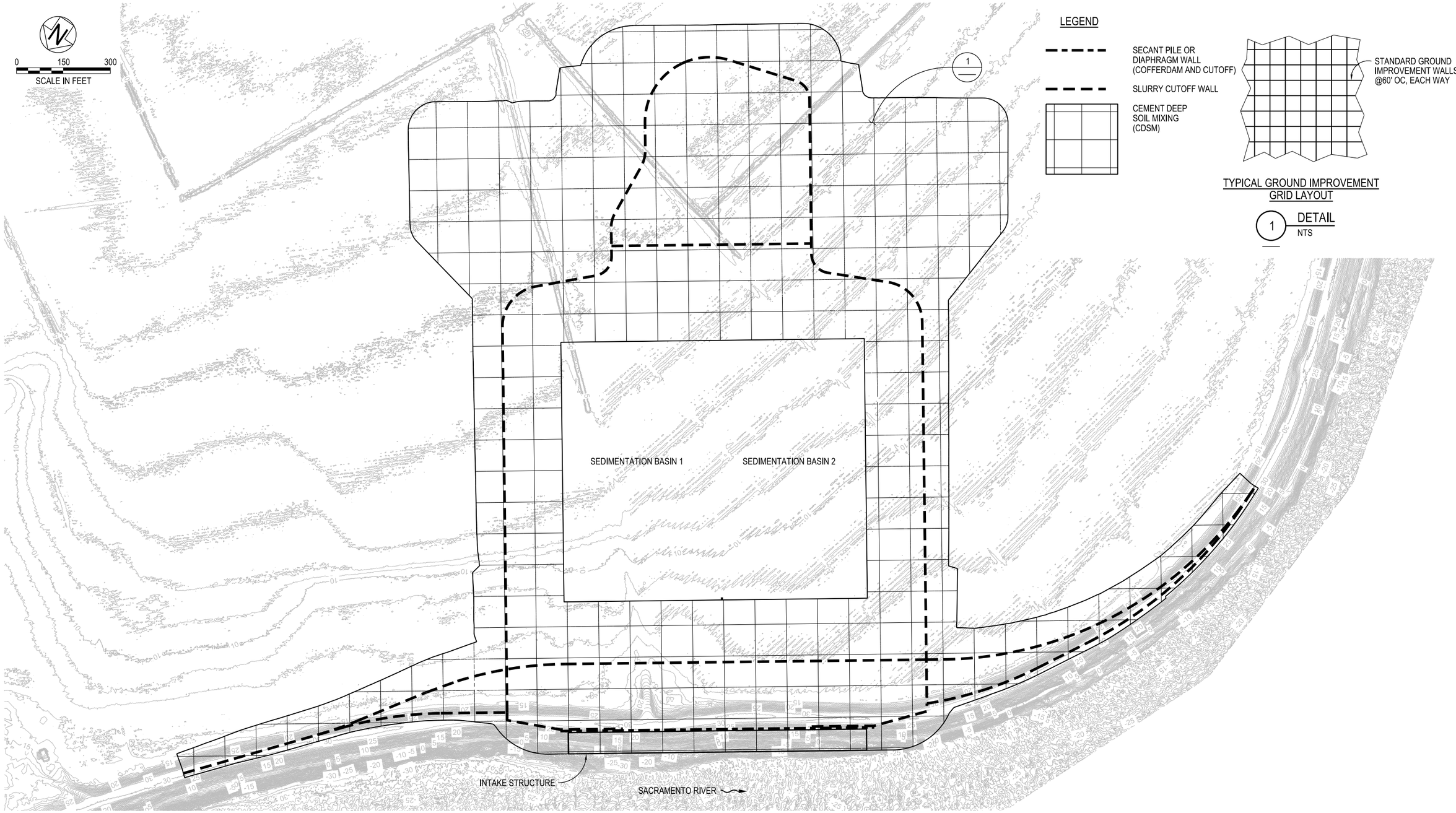

PLAN
1"=150'

INTAKES

VERIFY SCALE
BAR IS ONE INCH ON ORIGINAL DRAWING.
0 1"

REV	DATE	DESCRIPTION	SUB.	APPD
	SEP 2024	DELTA CONVEYANCE PROJECT CONCEPT ENGINEERING REPORT DRAWINGS		

DESIGNED: J REYNOLDS
DRAWN: D CORBETT
CHECKED: J JUNKERT
APPROVAL RECOMMENDED:
APPROVAL BY: A MURDOCK

CONCEPT PLANNING DOCUMENT

NOT FOR CONSTRUCTION

DELTA CONVEYANCE DESIGN & CONSTRUCTION AUTHORITY

DELTA CONVEYANCE PROJECT
CONCEPT ENGINEERING REPORT

TYPICAL TEE SCREEN INTAKE GROUND IMPROVEMENT PLAN

PROJECT NO. W8X97000
SHEET NO. CER-C-0007IT
REV
SEQUENCE NO. 15

CER-C-0007IT_W8X97000.dgn

PLOT DATE:10/7/2024 PLOT TIME:2:49:28 PM

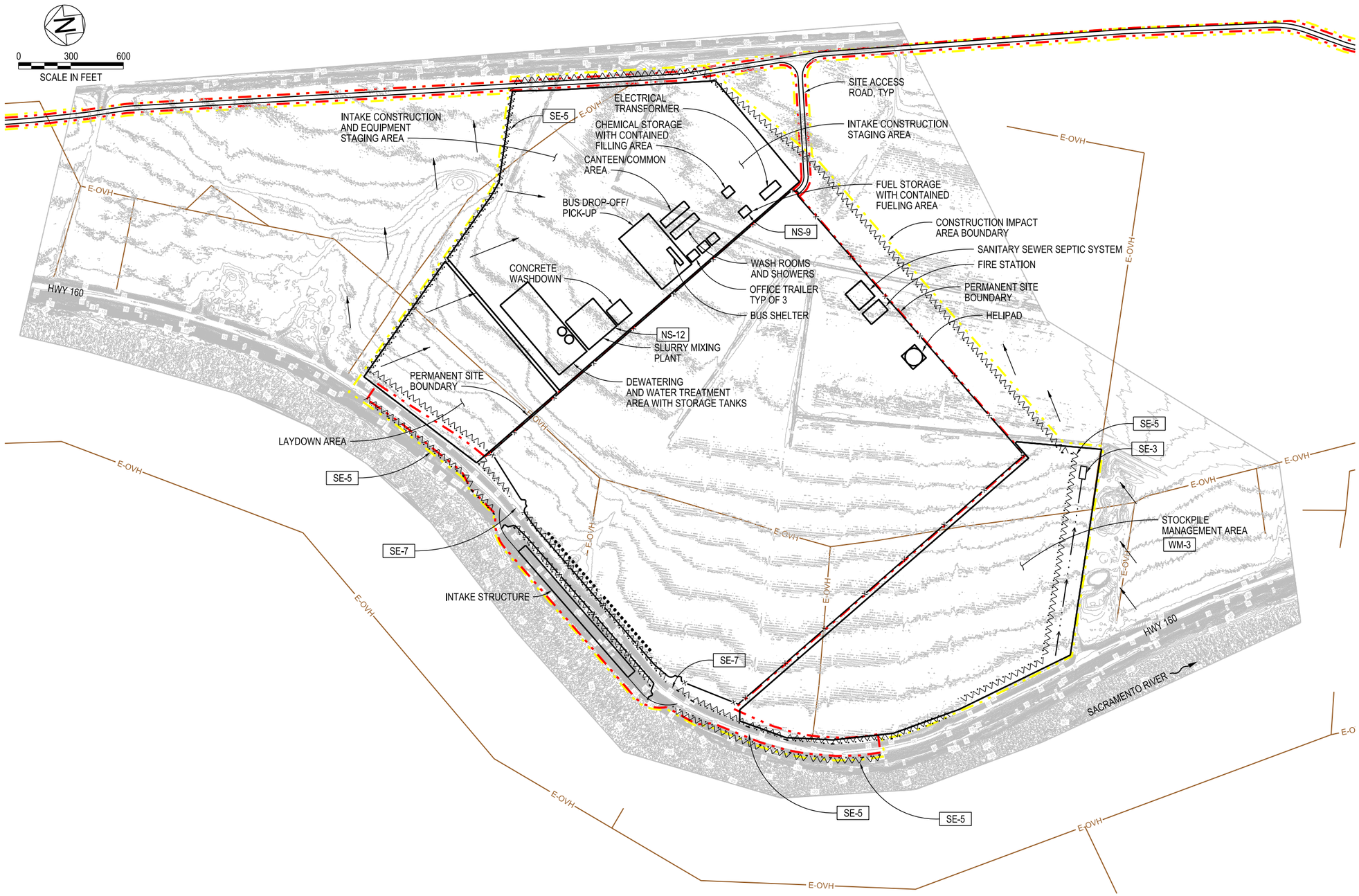

PLAN
1"=300'

TYPICAL DISCHARGE POINT BMPS:

SE-3 SEDIMENT TRAP (AS NEEDED)

SE-4 CHECK DAMS

TYPICAL PERIMETER CONTROLS INCLUDE:

EC-9 EARTH DIKES AND DRAINAGE SWALES TO PREVENT STORM WATER FROM ENTERING CONSTRUCTION DELINEATION

SE-1 SILT FENCE
OR
SE-5 FIBER ROLLS

SE-4 CHECK DAMS

AS NEEDED:
SE-3 SEDIMENT TRAP

TYPICAL ONSITE BMPS MAY INCLUDE:

TYPICAL ONSITE BMPS MAY INCLUDE:

NS-2 DEWATERING OPERATIONS

NS-9 VEHICLE AND EQUIPMENT FUELING

NS-12 CONCRETE CURING

NS-13 CONCRETE FINISHING

NS-16 TEMPORARY BATCH PLANTS

WE-1 WIND EROSION CONTROL

WM-1 MATERIAL DELIVERY AND STORAGE

WM-3 STOCKPILE

WM-9 SANITARY SEPTIC WASTE MANAGEMENT

WM-5 SOLID WASTE MANAGEMENT

WM-8 CONCRETE WASTE MANAGEMENT

TYPICAL SITE ENTRANCE/EXIT AND ACCESS BMPS:

TC-1 STABILIZED CONSTRUCTION ENTRANCE EXIT

AS NEEDED:
TC-2 STABILIZED CONSTRUCTION ROADWAY

SE-7 STREET SWEEPING AND VACUUMING

LEGEND

SILT FENCE OR FIBER ROLLS

DRAINAGE DITCH FLOW LINE

ANTICIPATED SURFACE WATER FLOW ARROWS

INTAKES

VERIFY SCALE
BAR IS ONE INCH ON ORIGINAL DRAWING.
0 1"

REV	DATE	DESCRIPTION	SUB.	APPD
	SEP 2024	DELTA CONVEYANCE PROJECT CONCEPT ENGINEERING REPORT DRAWINGS		

DESIGNED: M DRAPER
DRAWN: D CAVE
CHECKED: J JUNKERT
APPROVAL RECOMMENDED:
APPROVAL BY: A MURDOCK

CONCEPT PLANNING DOCUMENT

NOT FOR CONSTRUCTION

DELTA CONVEYANCE DESIGN & CONSTRUCTION AUTHORITY

DELTA CONVEYANCE PROJECT
CONCEPT ENGINEERING REPORT

TYPICAL TEE SCREEN INTAKE FACILITY CONSTRUCTION SWPPP

PROJECT NO. W8X97000
SHEET NO. CER-C-0010IT
REV
SEQUENCE NO. 16

CER-C-0010IT_W8X97000.dgn

PLOT DATE:10/7/2024 PLOT TIME:2:53:45 PM

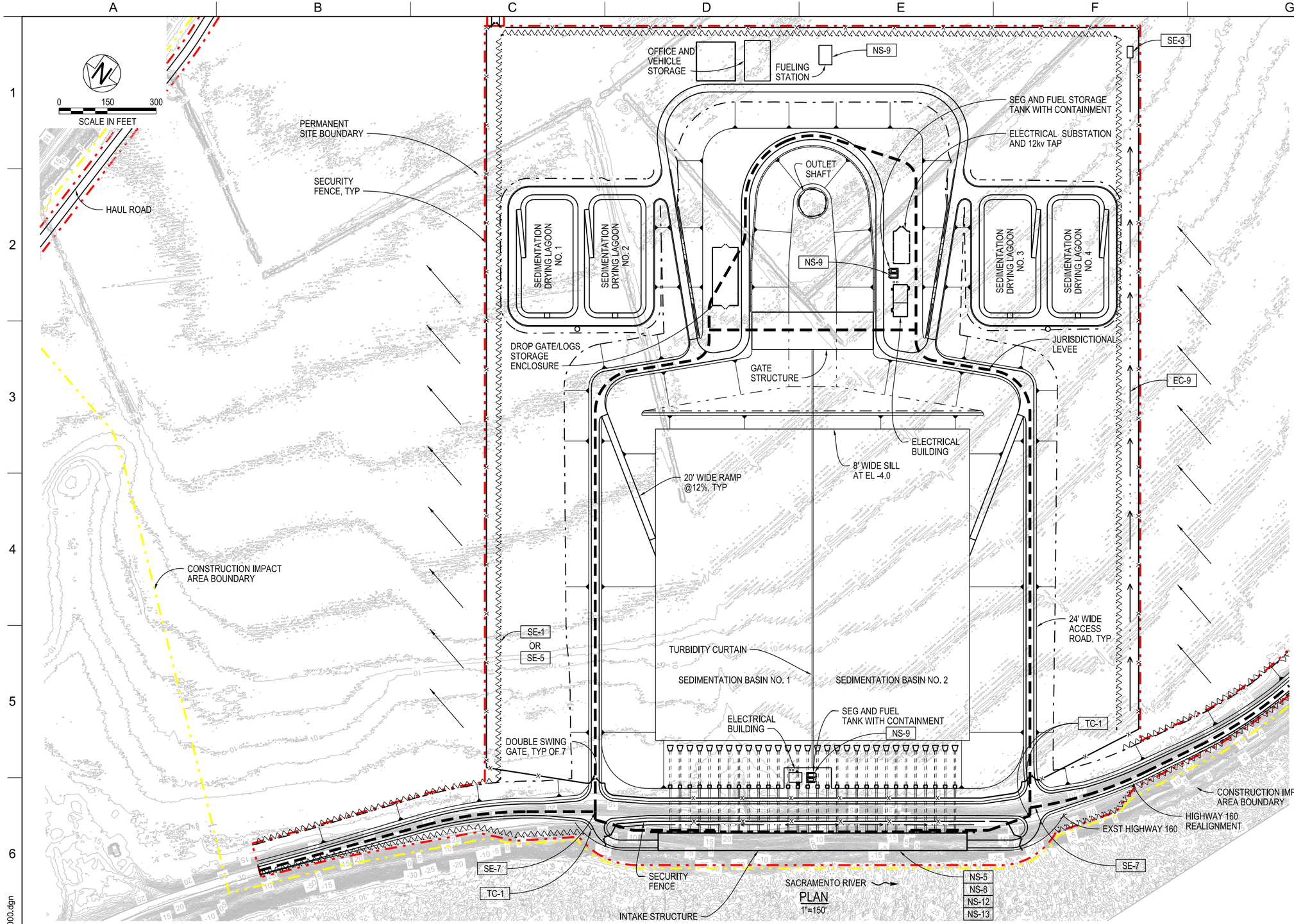

TYPICAL DISCHARGE POINT BMPS:

SE-3 SEDIMENT TRAP (AS NEEDED)

SE-4 CHECK DAMS

TYPICAL PERIMETER CONTROLS INCLUDE:

EC-9 EARTH DIKES AND DRAINAGE SWALES TO PREVENT STORM WATER FROM ENTERING CONSTRUCTION DELINEATION

SE-1 SILT FENCE
OR
SE-5 FIBER ROLLS

SE-4 CHECK DAMS

EC-9 EARTH DIKES AND DRAINAGE SWALES

NS-5 CLEAR WATER DIVERSION

AS NEEDED:
SE-3 SEDIMENT TRAP

TYPICAL ONSITE BMPS MAY INCLUDE:

TYPICAL ONSITE BMPS MAY INCLUDE:

NS-2 DEWATERING OPERATIONS

NS-9 VEHICLE AND EQUIPMENT FUELING

NS-12 CONCRETE CURING

NS-13 CONCRETE FINISHING

NS-16 TEMPORARY BATCH PLANTS

WE-1 WIND EROSION CONTROL

WM-1 MATERIAL DELIVERY AND STORAGE

WM-3 STOCKPILE

WM-9 SANITARY SEPTIC WASTE MANAGEMENT

WM-5 SOLID WASTE MANAGEMENT

WM-8 CONCRETE WASTE MANAGEMENT

TYPICAL SITE ENTRANCE/EXIT AND ACCESS BMPS:

TC-1 STABILIZED CONSTRUCTION ENTRANCE EXIT

AS NEEDED:
TC-2 STABILIZED CONSTRUCTION ROADWAY

SE-7 STREET SWEEPING AND VACUUMING

NS-8 VEHICLE AND CLEANING EQUIPMENT

NOTES:

1. ALL TEMPORARY EROSION AND SEDIMENT CONTROL MEASURES (FIBER ROLLS SILT FENCE ETC)TO BE REMOVED UPON FULL SITE STABILIZATION.

LEGEND

SILT FENCE OR FIBER ROLLS

DRAINAGE DITCH FLOW LINE

ANTICIPATED SURFACE WATER FLOW ARROWS

INTAKES

VERIFY SCALE
BAR IS ONE INCH ON ORIGINAL DRAWING.
0 1"

REV	DATE	DESCRIPTION	SUB.	APPD
	SEP 2024	DELTA CONVEYANCE PROJECT CONCEPT ENGINEERING REPORT DRAWINGS		

DESIGNED: M DRAPER
DRAWN: D CAVE
CHECKED: J JUNKERT
APPROVAL RECOMMENDED:
APPROVAL BY: A MURDOCK

CONCEPT PLANNING DOCUMENT

NOT FOR CONSTRUCTION

DELTA CONVEYANCE DESIGN & CONSTRUCTION AUTHORITY

DELTA CONVEYANCE PROJECT
CONCEPT ENGINEERING REPORT

TYPICAL TEE SCREEN INTAKE FACILITY
POST CONSTRUCTION SWPPP

PROJECT NO. W8X97000
SHEET NO. CER-C-0011IT
REV
SEQUENCE NO. 17

CER-C-0011IT_W8X97000.dgn

PLOT DATE:10/7/2024 PLOT TIME:2:49:38 PM

NOTES:

1. CROPPING PATTERNS NEED TO BE VERIFIED, SOME DESIGNATIONS DON'T MATCH IMAGERY.
2. ONE FUEL TANK SHOWN, THE PRESENCE OF OTHERS IS UNKNOWN.

LEGEND

B	BARN
C	IRRIGATION DITCH
D	DITCH
DR	DIRT ROAD
DW	DRIVEWAY
DT	FUEL TANK
H	HOUSE
IP	IRRIGATION PUMP
W	WELL
E-OVH	ELECTRICAL OVERHEAD
W	IRRIGATION DITCH

PLAN
1"=300'

INTAKES

VERIFY SCALE
BAR IS ONE INCH ON ORIGINAL DRAWING.
0 1"

REV	DATE	DESCRIPTION	SUB.	APPD
	SEP 2024	DELTA CONVEYANCE PROJECT CONCEPT ENGINEERING REPORT DRAWINGS		

DESIGNED J REYNOLDS
DRAWN B CHELONIS
CHECKED J JUNKERT
APPROVAL RECOMMENDED
APPROVAL BY A MURDOCK

CONCEPT PLANNING DOCUMENT
NOT FOR CONSTRUCTION

DELTA CONVEYANCE DESIGN & CONSTRUCTION AUTHORITY

DELTA CONVEYANCE PROJECT
CONCEPT ENGINEERING REPORT

INTAKE 3
EXISTING PLAN

PROJECT NO. W8X97000
SHEET NO. CER-C-1010IT
REV
SEQUENCE NO. 18

CER-C-1010IT_W8X97000.dgn

PLOT DATE:10/7/2024 PLOT TIME:3:29:46 PM

ANSI_D.DWG

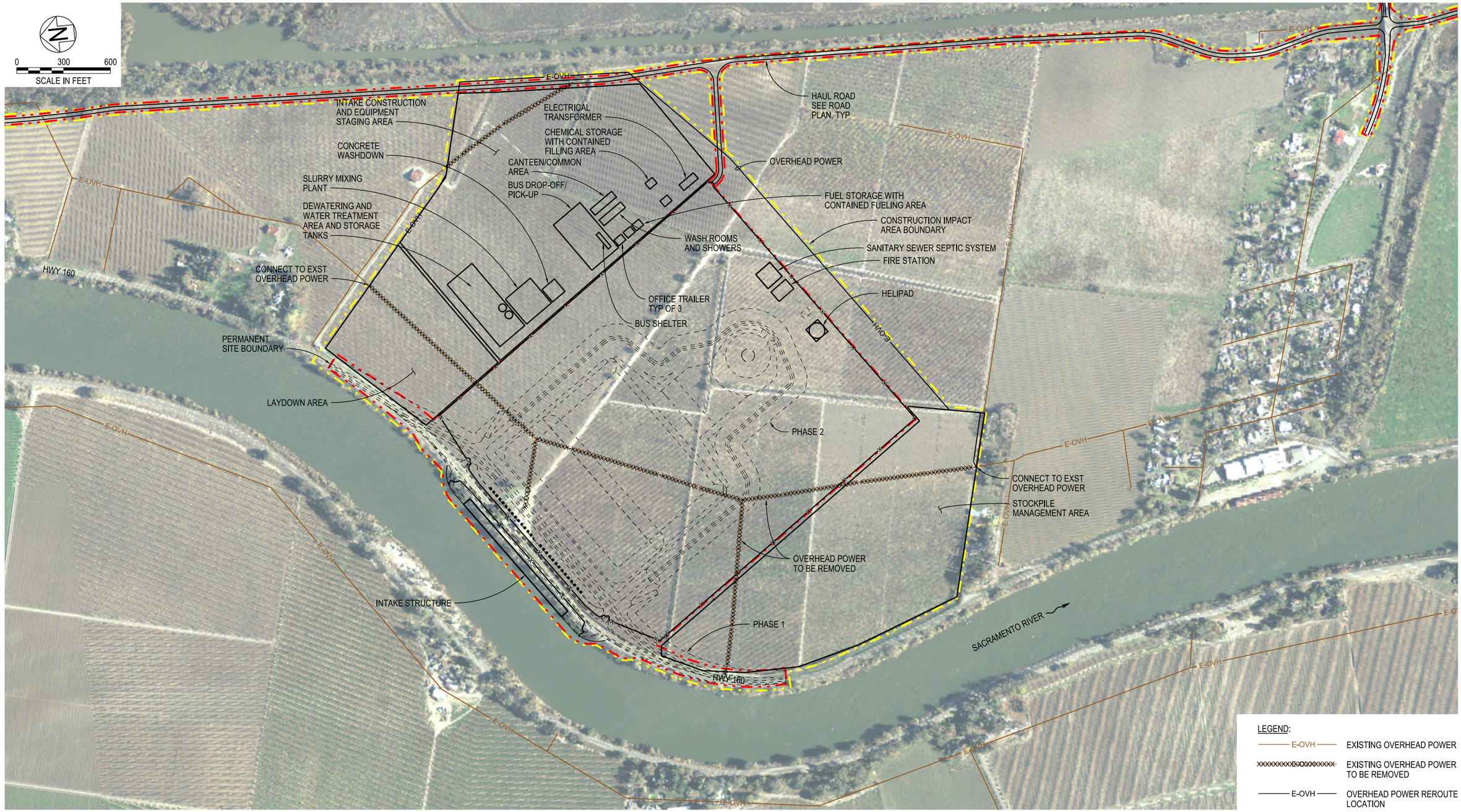

PLAN
1"=300'

INTAKES

VERIFY SCALE
BAR IS ONE INCH ON ORIGINAL DRAWING.
0 1"

REV	DATE	DESCRIPTION	SUB.	APPD
	SEP 2024	DELTA CONVEYANCE PROJECT CONCEPT ENGINEERING REPORT DRAWINGS		

DESIGNED: J REYNOLDS
DRAWN: B CHELONIS
CHECKED: J JUNKERT
APPROVAL RECOMMENDED:
APPROVAL BY: A MURDOCK

CONCEPT PLANNING DOCUMENT

NOT FOR CONSTRUCTION

DELTA CONVEYANCE DESIGN & CONSTRUCTION AUTHORITY

DELTA CONVEYANCE PROJECT
CONCEPT ENGINEERING REPORT

INTAKE 3
CONSTRUCTION PHASE OVERVIEW

PROJECT NO. W8X97000
SHEET NO. CER-C-1015IT
REV
SEQUENCE NO. 19

CER-C-1015IT_W8X97000.dgn

PLOT DATE:10/7/2024 PLOT TIME:3:33:58 PM

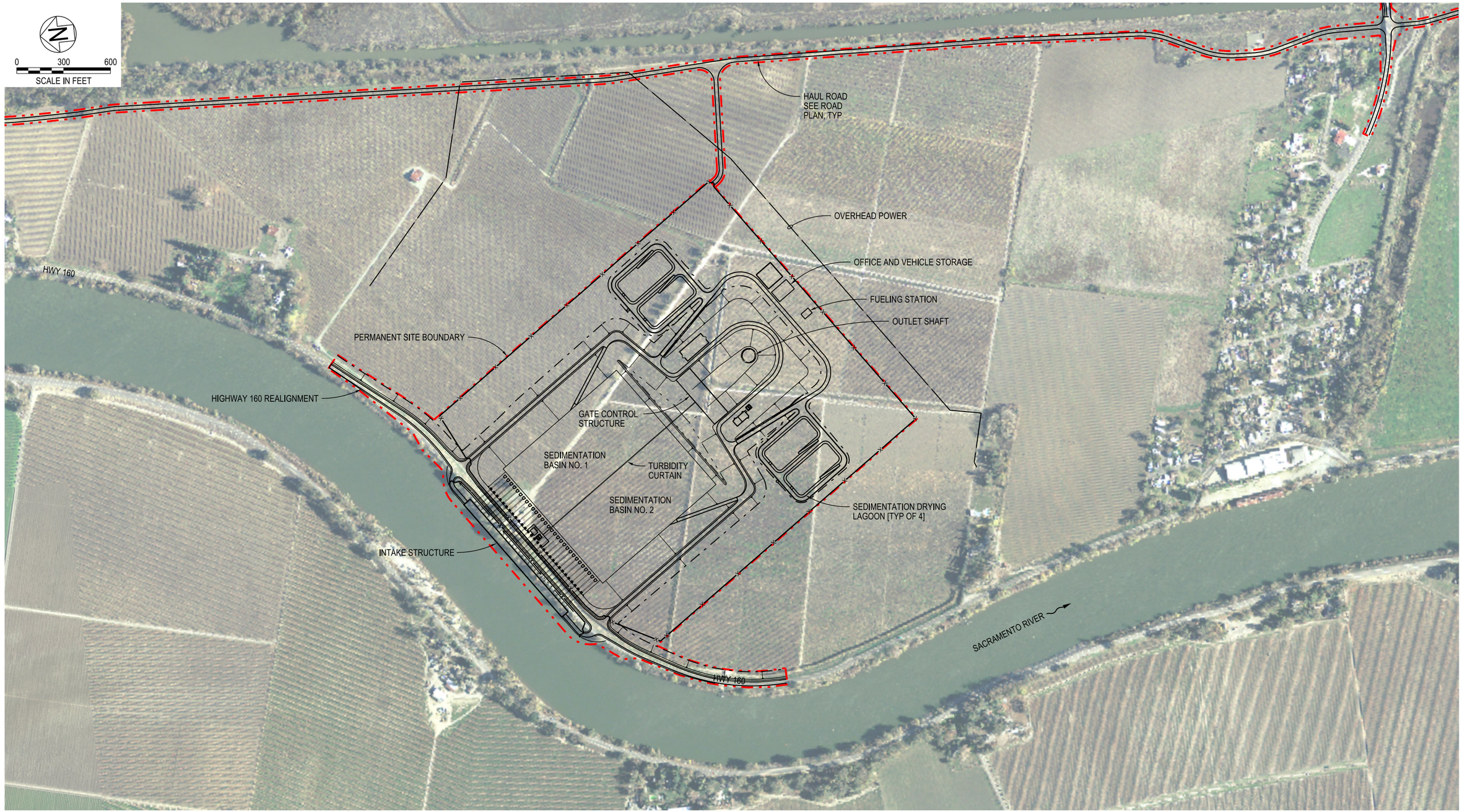

PLAN
1"=300'

INTAKES

VERIFY SCALE
BAR IS ONE INCH ON ORIGINAL DRAWING.
0 1"

REV	DATE	DESCRIPTION	SUB.	APPD
	SEP 2024	DELTA CONVEYANCE PROJECT CONCEPT ENGINEERING REPORT DRAWINGS		

DESIGNED: J REYNOLDS
DRAWN: B CHELONIS
CHECKED: J JUNKERT
APPROVAL RECOMMENDED:
APPROVAL BY: A MURDOCK

CONCEPT PLANNING DOCUMENT

NOT FOR CONSTRUCTION

DELTA CONVEYANCE DESIGN & CONSTRUCTION AUTHORITY

DELTA CONVEYANCE PROJECT
CONCEPT ENGINEERING REPORT

INTAKE 3
FINAL OVERVIEW

PROJECT NO. W8X97000
SHEET NO. CER-C-1015AIT
REV
SEQUENCE NO. 20

CER-C-1015AIT_W8X97000.dgn

PLOT DATE:10/7/2024 PLOT TIME:3:39:30 PM

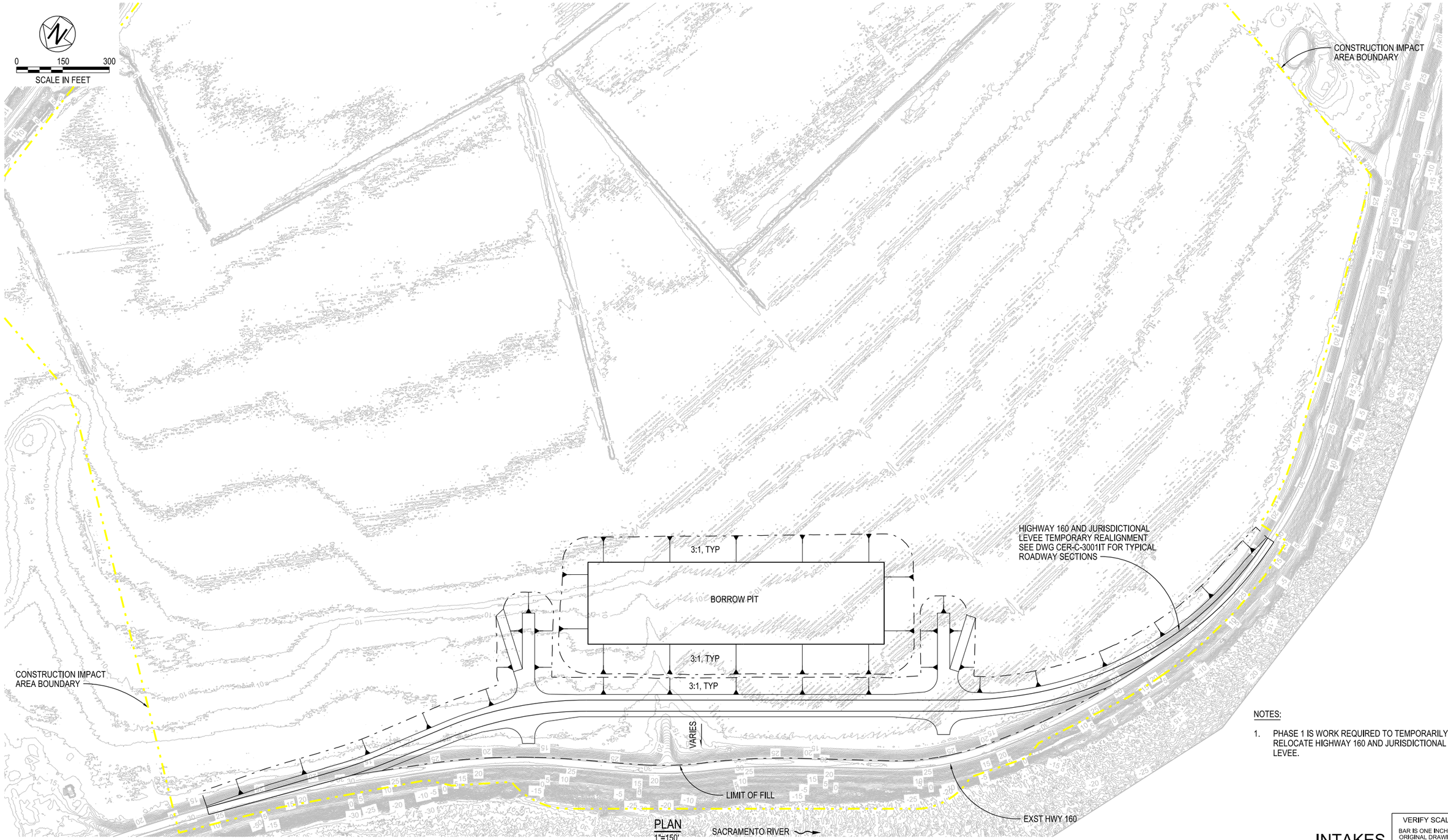

PLAN
1"=150'

NOTES:

1. PHASE 1 IS WORK REQUIRED TO TEMPORARILY RELOCATE HIGHWAY 160 AND JURISDICTIONAL LEVEE.

INTAKES

VERIFY SCALE
BAR IS ONE INCH ON ORIGINAL DRAWING.
0 1"

REV	DATE	DESCRIPTION	SUB.	APPD
	SEP 2024	DELTA CONVEYANCE PROJECT CONCEPT ENGINEERING REPORT DRAWINGS		

DESIGNED: B CHELONIS
DRAWN: D CORBETT
CHECKED: J JUNKERT
APPROVAL RECOMMENDED:
APPROVAL BY: A MURDOCK

CONCEPT PLANNING DOCUMENT

NOT FOR CONSTRUCTION

DELTA CONVEYANCE DESIGN & CONSTRUCTION AUTHORITY

DELTA CONVEYANCE PROJECT
CONCEPT ENGINEERING REPORT

INTAKE 3
PHASE 1 SITE PLAN

PROJECT NO. W8X97000
SHEET NO. CER-C-1016IT
REV
SEQUENCE NO. 21

CER-C-1016IT_W8X97000.dgn

PLOT DATE:10/7/2024 PLOT TIME:2:49:49 PM

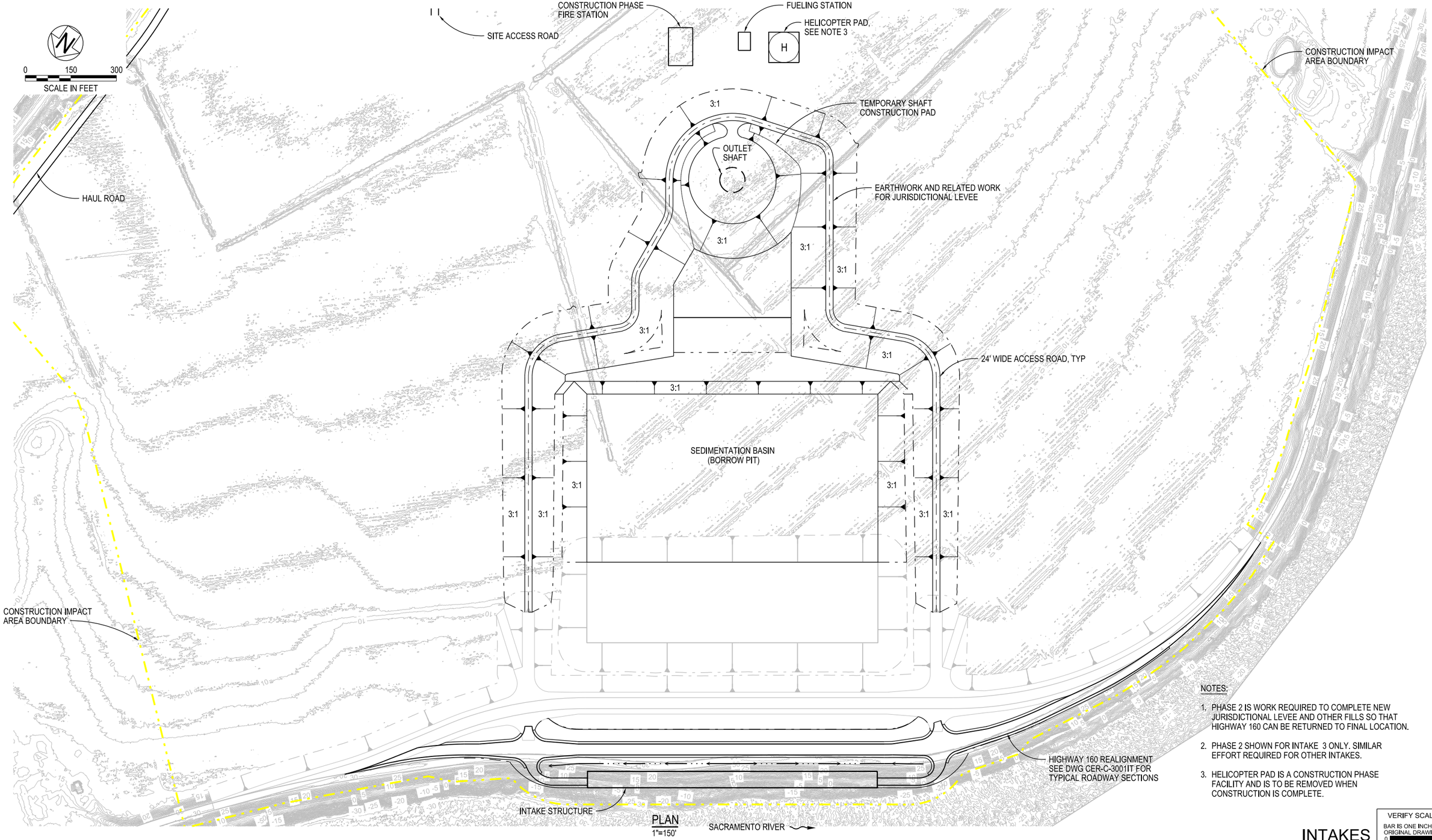

PLAN
1"=150'

NOTES:

1. PHASE 2 IS WORK REQUIRED TO COMPLETE NEW JURISDICTIONAL LEVEE AND OTHER FILLS SO THAT HIGHWAY 160 CAN BE RETURNED TO FINAL LOCATION.
2. PHASE 2 SHOWN FOR INTAKE 3 ONLY. SIMILAR EFFORT REQUIRED FOR OTHER INTAKES.
3. HELICOPTER PAD IS A CONSTRUCTION PHASE FACILITY AND IS TO BE REMOVED WHEN CONSTRUCTION IS COMPLETE.

INTAKES

VERIFY SCALE
BAR IS ONE INCH ON ORIGINAL DRAWING.
0 1"

REV	DATE	DESCRIPTION	SUB.	APPD
	SEP 2024	DELTA CONVEYANCE PROJECT CONCEPT ENGINEERING REPORT DRAWINGS		

DESIGNED: B CHELONIS
DRAWN: D CORBETT
CHECKED: J JUNKERT
APPROVAL RECOMMENDED:
APPROVAL BY: A MURDOCK

CONCEPT PLANNING DOCUMENT

NOT FOR CONSTRUCTION

DELTA CONVEYANCE DESIGN & CONSTRUCTION AUTHORITY

DELTA CONVEYANCE PROJECT
CONCEPT ENGINEERING REPORT

INTAKE 3
PHASE 2 SITE PLAN

PROJECT NO. W8X97000
SHEET NO. CER-C-1017IT
REV
SEQUENCE NO. 22

CER-C-1017IT_W8X97000.dgn

PLOT DATE:10/7/2024 PLOT TIME:2:50:14 PM

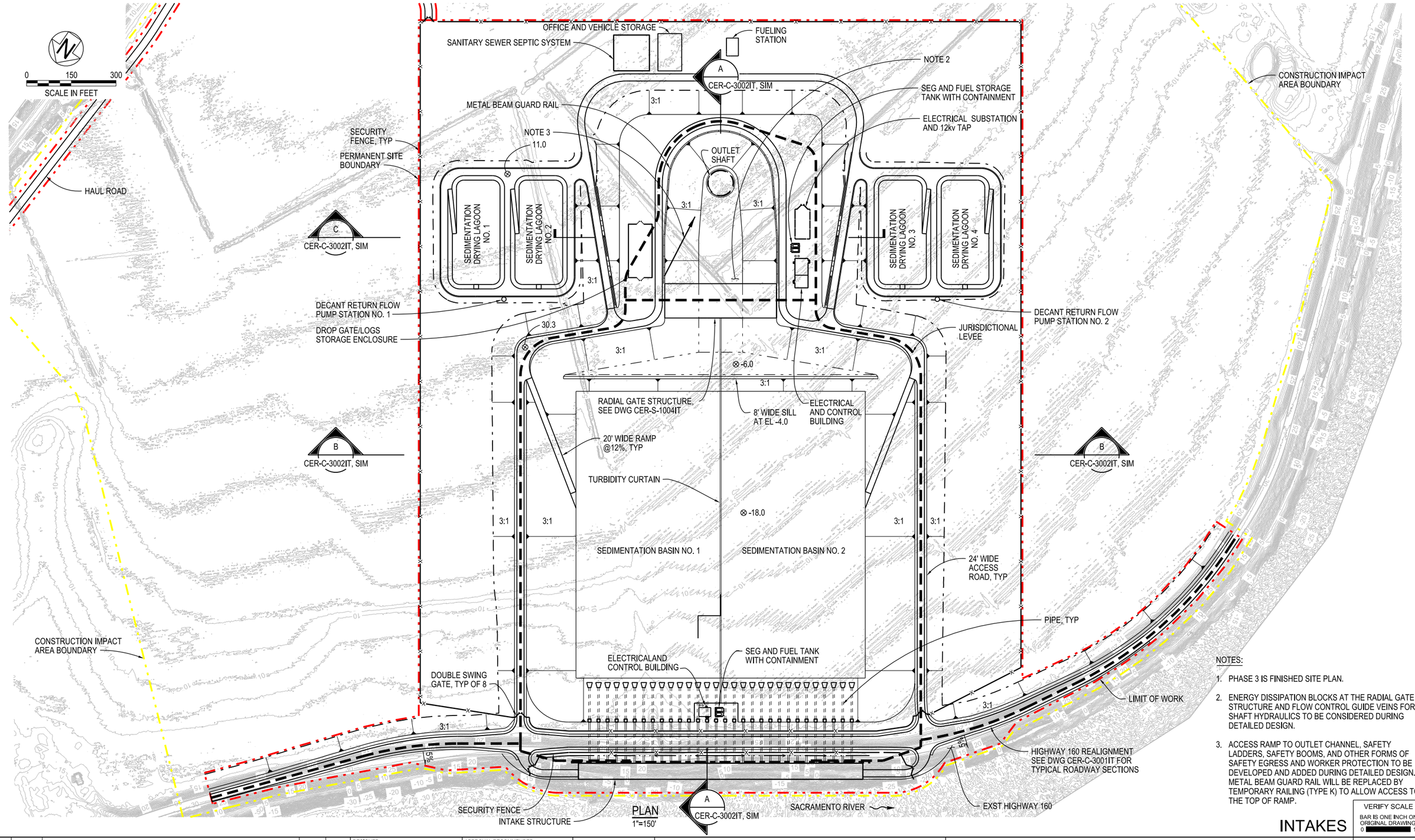

NOTES:

1. PHASE 3 IS FINISHED SITE PLAN.
2. ENERGY DISSIPATION BLOCKS AT THE RADIAL GATE STRUCTURE AND FLOW CONTROL GUIDE VEINS FOR SHAFT HYDRAULICS TO BE CONSIDERED DURING DETAILED DESIGN.
3. ACCESS RAMP TO OUTLET CHANNEL, SAFETY LADDERS, SAFETY BOOMS, AND OTHER FORMS OF SAFETY EGRESS AND WORKER PROTECTION TO BE DEVELOPED AND ADDED DURING DETAILED DESIGN. METAL BEAM GUARD RAIL WILL BE REPLACED BY TEMPORARY RAILING (TYPE K) TO ALLOW ACCESS TO THE TOP OF RAMP.

VERIFY SCALE
BAR IS ONE INCH ON ORIGINAL DRAWING.
0 1"

INTAKES

REV	DATE	DESCRIPTION	SUB.	APPD
	SEP 2024	DELTA CONVEYANCE PROJECT CONCEPT ENGINEERING REPORT DRAWINGS		

DESIGNED: B CHELONIS
DRAWN: D CORBETT
CHECKED: J JUNKERT
APPROVAL RECOMMENDED:
APPROVAL BY: A MURDOCK

CONCEPT PLANNING DOCUMENT

NOT FOR CONSTRUCTION

DELTA CONVEYANCE DESIGN & CONSTRUCTION AUTHORITY

DELTA CONVEYANCE PROJECT
CONCEPT ENGINEERING REPORT

INTAKE 3
PHASE 3 SITE PLAN

PROJECT NO. W8X97000
SHEET NO. CER-C-1018IT
REV
SEQUENCE NO. 23

CER-C-1018IT_W8X97000.dgn

PLOT DATE:10/7/2024 PLOT TIME:2:50:31 PM

PLAN
1"=300'

INTAKES

VERIFY SCALE
BAR IS ONE INCH ON ORIGINAL DRAWING.
0 1"

REV	DATE	DESCRIPTION	SUB.	APPD
	SEP 2024	DELTA CONVEYANCE PROJECT CONCEPT ENGINEERING REPORT DRAWINGS		

DESIGNED: J REYNOLDS
DRAWN: B CHELONIS
CHECKED: J JUNKERT
APPROVAL RECOMMENDED:
APPROVAL BY: A MURDOCK

CONCEPT PLANNING DOCUMENT
NOT FOR CONSTRUCTION

DELTA CONVEYANCE DESIGN & CONSTRUCTION AUTHORITY

DELTA CONVEYANCE PROJECT
CONCEPT ENGINEERING REPORT

INTAKE 5
EXISTING PLAN

PROJECT NO. W8X97000
SHEET NO. CER-C-1019IT
REV
SEQUENCE NO. 24

CER-C-1019IT_W8X97000.dgn

PLOT DATE:10/7/2024 PLOT TIME:3:34:50 PM

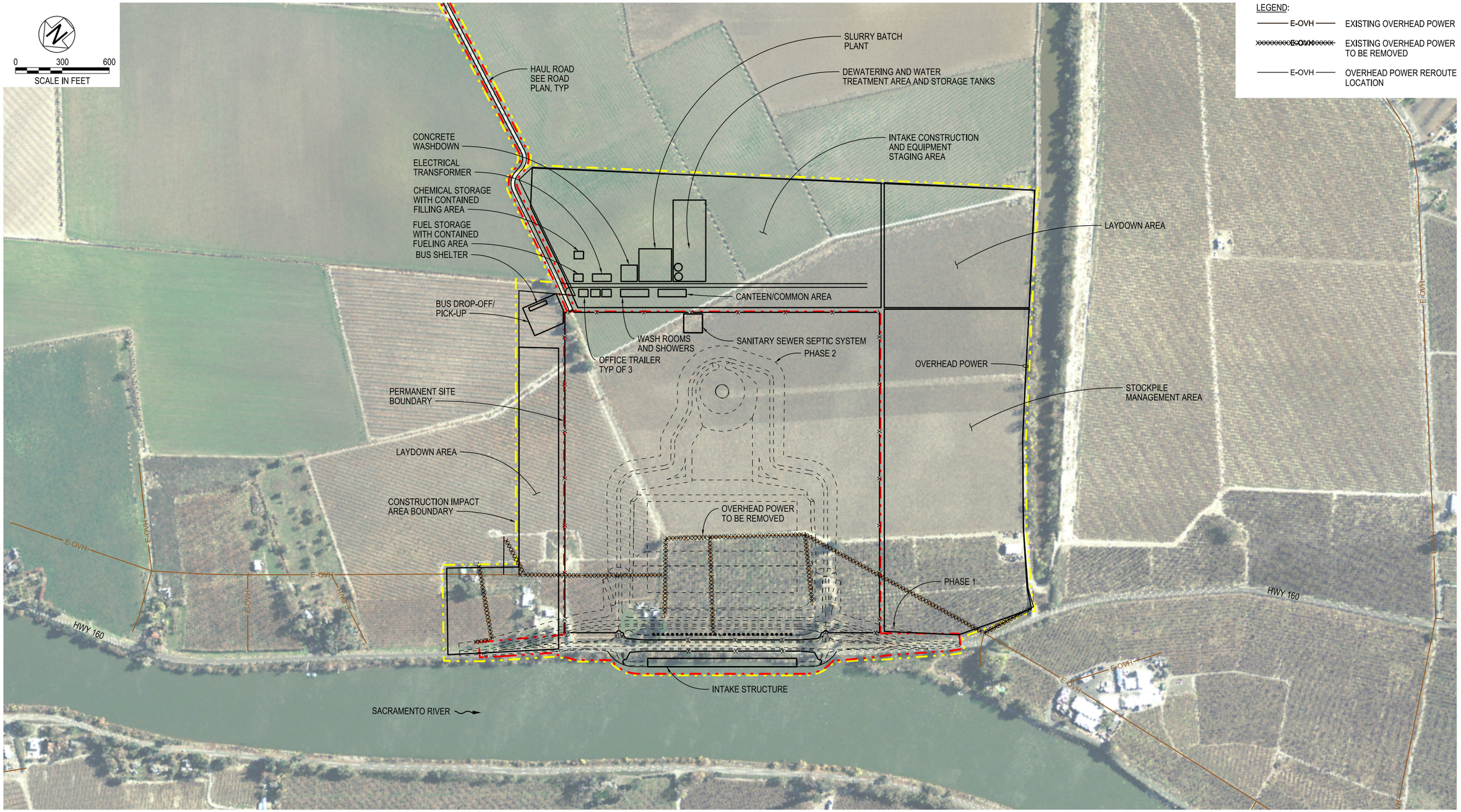

PLAN
1"=300'

INTAKES

VERIFY SCALE
BAR IS ONE INCH ON ORIGINAL DRAWING.
0 1"

REV	DATE	DESCRIPTION	SUB.	APPD
	SEP 2024	DELTA CONVEYANCE PROJECT CONCEPT ENGINEERING REPORT DRAWINGS		

DESIGNED: J REYNOLDS
DRAWN: B CHELONIS
CHECKED: J JUNKERT
APPROVAL RECOMMENDED:
APPROVAL BY: A MURDOCK

CONCEPT PLANNING DOCUMENT

NOT FOR CONSTRUCTION

DELTA CONVEYANCE DESIGN & CONSTRUCTION AUTHORITY

DELTA CONVEYANCE PROJECT
CONCEPT ENGINEERING REPORT

INTAKE 5
CONSTRUCTION PHASE OVERVIEW

PROJECT NO. W8X97000
SHEET NO. CER-C-1024IT
REV
SEQUENCE NO. 25

CER-C-1024IT_W8X97000.dgn

PLOT DATE:10/7/2024 PLOT TIME:3:34:21 PM

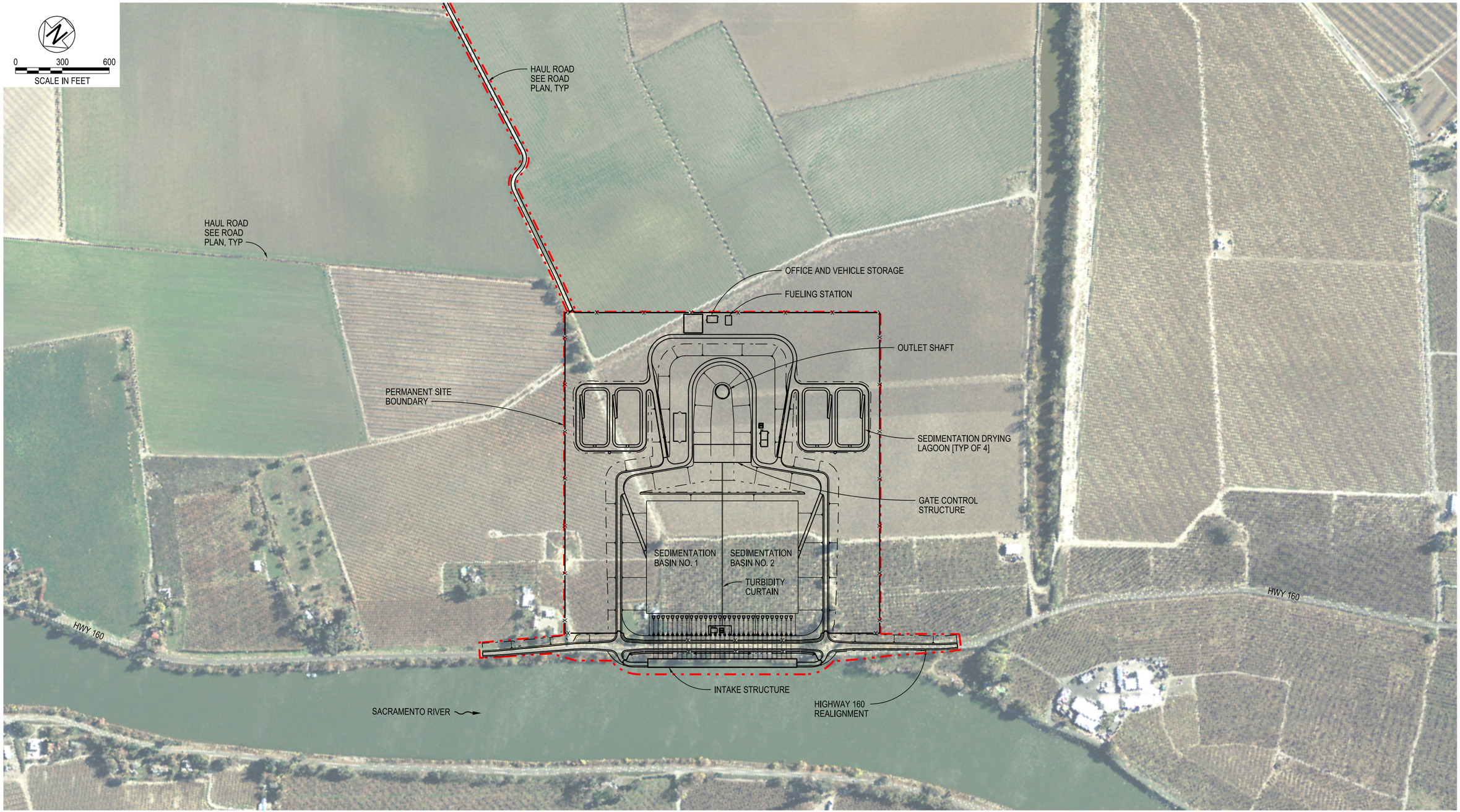

PLAN
1"=300'

INTAKES

VERIFY SCALE
BAR IS ONE INCH ON ORIGINAL DRAWING.
0 1"

REV	DATE	DESCRIPTION	SUB.	APPD
	SEP 2024	DELTA CONVEYANCE PROJECT CONCEPT ENGINEERING REPORT DRAWINGS		

DESIGNED: J REYNOLDS
DRAWN: B CHELONIS
CHECKED: J JUNKERT
APPROVAL RECOMMENDED:
APPROVAL BY: A MURDOCK

CONCEPT PLANNING DOCUMENT

NOT FOR CONSTRUCTION

DELTA CONVEYANCE DESIGN & CONSTRUCTION AUTHORITY

DELTA CONVEYANCE PROJECT
CONCEPT ENGINEERING REPORT

INTAKE 5
FINAL OVERVIEW

PROJECT NO. W8X97000
SHEET NO. CER-C-1024AIT
REV
SEQUENCE NO. 26

CER-C-1024AIT_W8X97000.dgn

PLOT DATE:10/7/2024 PLOT TIME:3:34:09 PM

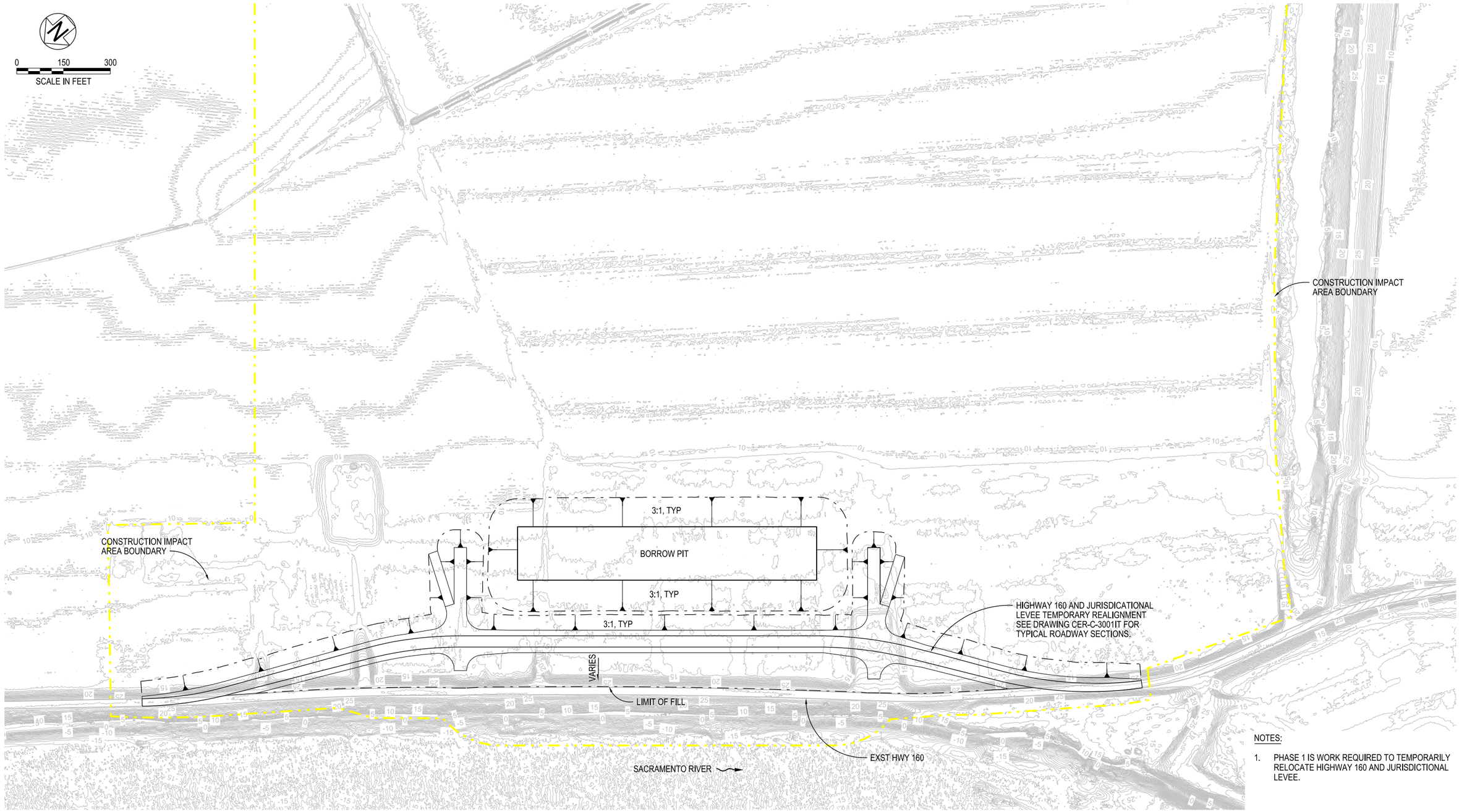

NOTES:

1. PHASE 1 IS WORK REQUIRED TO TEMPORARILY RELOCATE HIGHWAY 160 AND JURISDICTIONAL LEVEE.

PLAN
1"=150'

INTAKES

VERIFY SCALE
BAR IS ONE INCH ON ORIGINAL DRAWING.
0 1"

REV	DATE	DESCRIPTION	SUB.	APPD
	SEP 2024	DELTA CONVEYANCE PROJECT CONCEPT ENGINEERING REPORT DRAWINGS		

DESIGNED: B CHELONIS
DRAWN: D CORBETT
CHECKED: J JUNKERT
APPROVAL RECOMMENDED:
APPROVAL BY: A MURDOCK

CONCEPT PLANNING DOCUMENT

NOT FOR CONSTRUCTION

DELTA CONVEYANCE DESIGN & CONSTRUCTION AUTHORITY

DELTA CONVEYANCE PROJECT
CONCEPT ENGINEERING REPORT

INTAKE 5
PHASE 1 SITE PLAN

PROJECT NO. W8X97000
SHEET NO. CER-C-1025IT
REV
SEQUENCE NO. 27

CER-C-1025IT_W8X97000.dgn

PLOT DATE:10/7/2024 PLOT TIME:2:53:44 PM

NOTES:

1. PHASE 3 IS FINISHED SITE PLAN.
2. ENERGY DISSIPATION BLOCKS AT THE RADIAL GATE STRUCTURE AND FLOW CONTROL GUIDE VEINS FOR SHAFT HYDRAULICS TO BE CONSIDERED DURING DETAILED DESIGN.
3. ACCESS RAMP TO OUTLET CHANNEL, SAFETY LADDERS, SAFETY BOOMS, AND OTHER FORMS OF SAFETY EGRESS AND WORKER PROTECTION TO BE DEVELOPED AND ADDED DURING DETAILED DESIGN. METAL BEAM GUARD RAIL WILL BE REPLACED BY TEMPORARY RAILING (TYPE K) TO ALLOW ACCESS TO THE TOP OF RAMP.

INTAKES

VERIFY SCALE
BAR IS ONE INCH ON ORIGINAL DRAWING.
0 1"

REV	DATE	DESCRIPTION	SUB.	APPD
	SEP 2024	DELTA CONVEYANCE PROJECT CONCEPT ENGINEERING REPORT DRAWINGS		

DESIGNED: B CHELONIS
DRAWN: D CORBETT
CHECKED: J JUNKERT
APPROVAL RECOMMENDED:
APPROVAL BY: A MURDOCK

CONCEPT PLANNING DOCUMENT

NOT FOR CONSTRUCTION

DELTA CONVEYANCE DESIGN & CONSTRUCTION AUTHORITY

DELTA CONVEYANCE PROJECT
CONCEPT ENGINEERING REPORT

INTAKE 5
PHASE 3 SITE PLAN

PROJECT NO. W8X97000
SHEET NO. CER-C-1027IT
REV
SEQUENCE NO. 28

CER-C-1027IT_W8X97000.dgn

PLOT DATE:10/7/2024 PLOT TIME:2:50:15 PM

INTAKE NO. 3
(SHOWN)

INTAKE NO. 5
(SIMILAR)

0 80 160
SCALE IN FEET

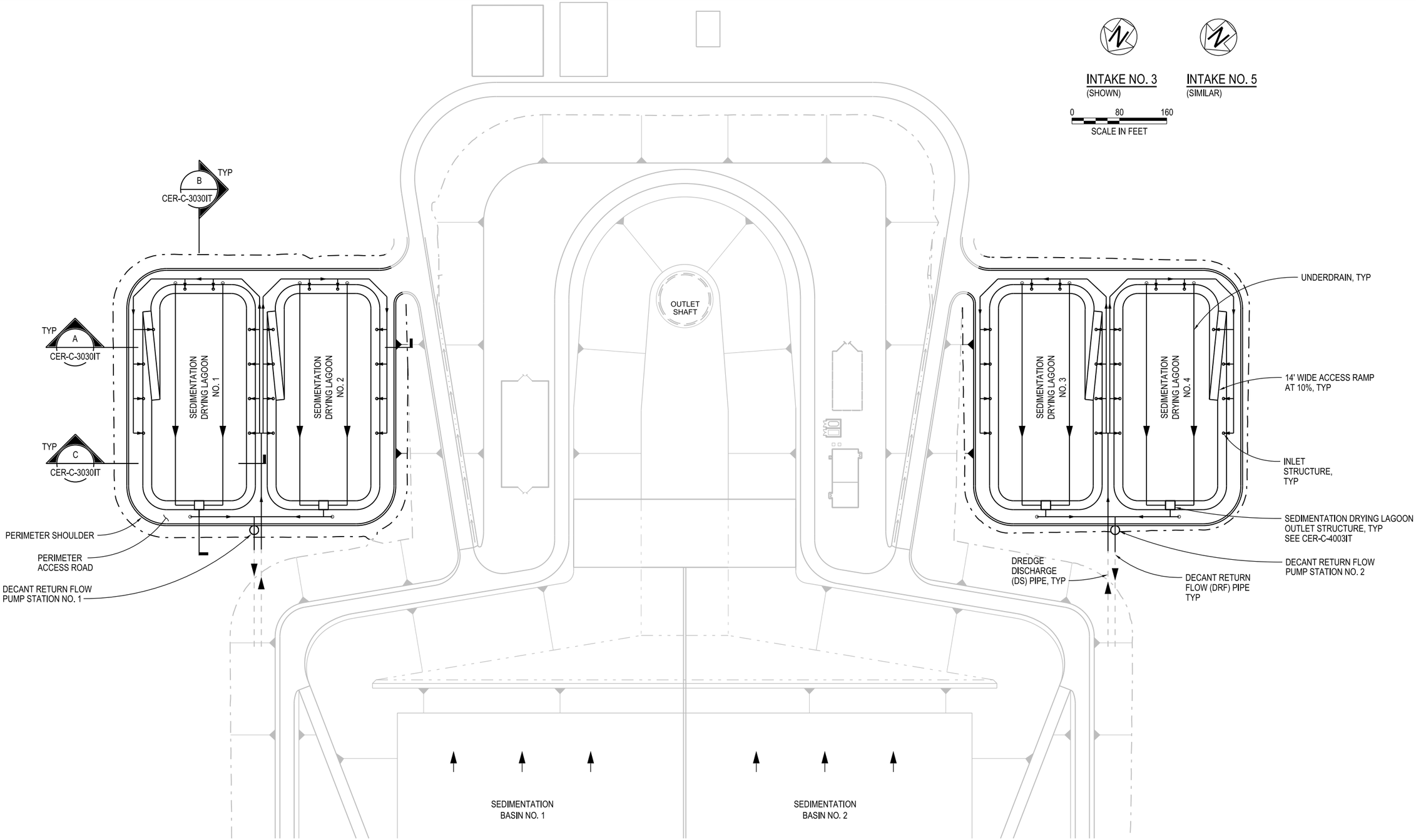

PLAN
1"=80'

INTAKES

VERIFY SCALE
BAR IS ONE INCH ON ORIGINAL DRAWING.
0 1"

REV	DATE	DESCRIPTION	SUB.	APPD
	SEP 2024	DELTA CONVEYANCE PROJECT CONCEPT ENGINEERING REPORT DRAWINGS		

DESIGNED: B CHELONIS
DRAWN:
CHECKED: J JUNKERT
APPROVAL RECOMMENDED:
APPROVAL BY: A MURDOCK

CONCEPT PLANNING DOCUMENT

NOT FOR CONSTRUCTION

DELTA CONVEYANCE DESIGN & CONSTRUCTION AUTHORITY

DELTA CONVEYANCE PROJECT
CONCEPT ENGINEERING REPORT

SEDIMENTATION DRYING LAGOON
TYPICAL PLAN

PROJECT NO. W8X97000
SHEET NO. CER-C-1030IT
REV
SEQUENCE NO. 29

CER-C-1030IT_W8X97000.dgn

PLOT DATE:10/7/2024 PLOT TIME:2:50:03 PM

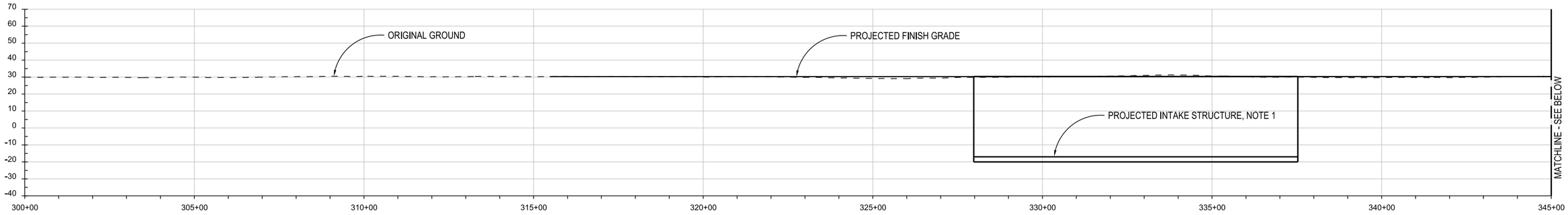

EXISTING HIGHWAY 160/LEVEE CENTERLINE AT INTAKE 3

PROFILE

1"=150'

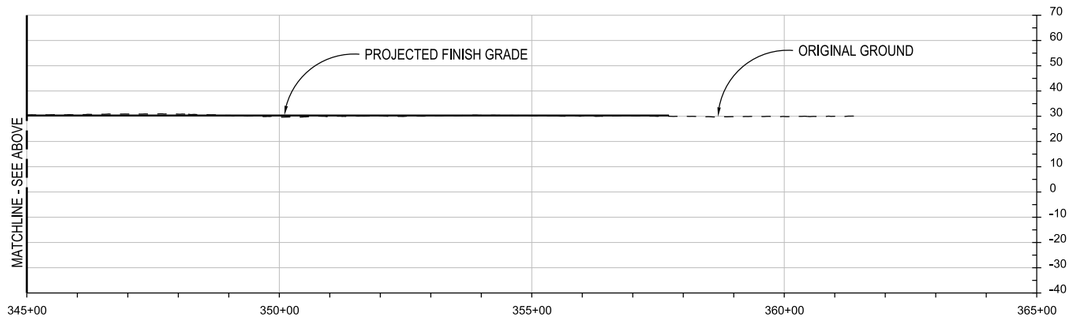

EXISTING HIGHWAY 160/LEVEE CENTERLINE AT INTAKE 3

PROFILE - CONTINUED

1"=150'

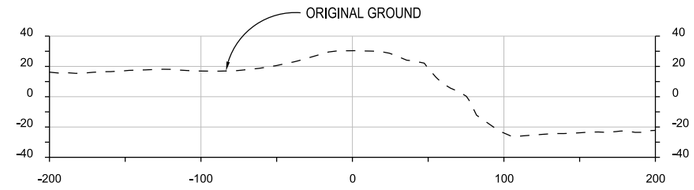

EXISTING HIGHWAY 160/LEVEE CENTERLINE AT INTAKE 3

SECTION - STA 310+00

1"=50'

NOTE:

1. CYLINDRICAL TEE SCREEN STRUCTURE SHOWN.

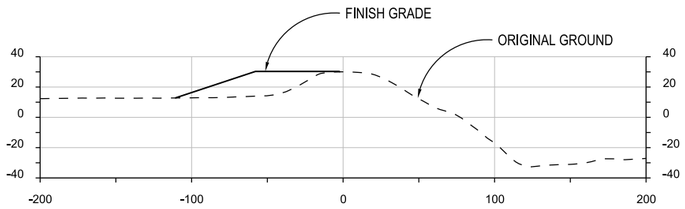

EXISTING HIGHWAY 160/LEVEE CENTERLINE AT INTAKE 3

SECTION - STA 320+00

1"=50'

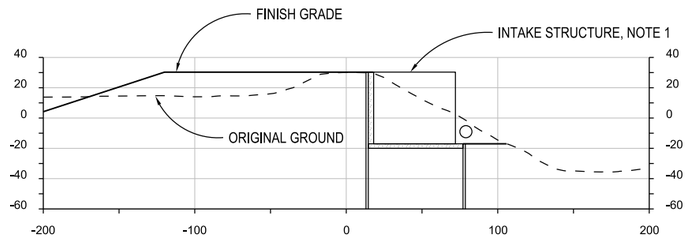

EXISTING HIGHWAY 160/LEVEE CENTERLINE AT INTAKE 3

SECTION - STA 330+00

1"=50'

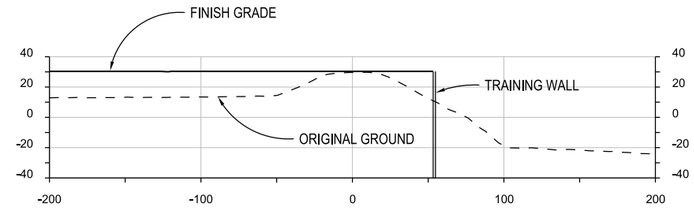

EXISTING HIGHWAY 160/LEVEE CENTERLINE AT INTAKE 3

SECTION - STA 340+00

1"=50'

INTAKES

VERIFY SCALE
BAR IS ONE INCH ON ORIGINAL DRAWING.
0 1"

REV	DATE	DESCRIPTION	SUB.	APPD
	SEP 2024	DELTA CONVEYANCE PROJECT CONCEPT ENGINEERING REPORT DRAWINGS		

DESIGNED: B CHELONIS
DRAWN: B CHELONIS
CHECKED: J JUNKERT
APPROVAL RECOMMENDED:
APPROVAL BY: A MURDOCK

CONCEPT PLANNING DOCUMENT

NOT FOR CONSTRUCTION

DELTA CONVEYANCE DESIGN & CONSTRUCTION AUTHORITY

DELTA CONVEYANCE PROJECT
CONCEPT ENGINEERING REPORT

INTAKE 3 - EXISTING LEVEE PROFILE AND CROSS SECTIONS W/ FINISH GRADE

PROJECT NO. W8X97000

SHEET NO. CER-C-2002IT

REV | SEQUENCE NO. 30

CER-C-2002IT_W8X97000.dgn

PLOT DATE:10/7/2024 PLOT TIME:2:53:18 PM

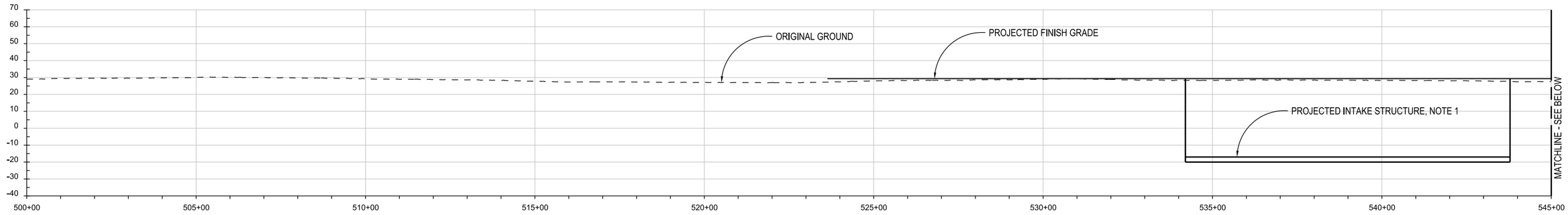

EXISTING HIGHWAY 160/LEVEE CENTERLINE AT INTAKE 5

PROFILE

1"=150'

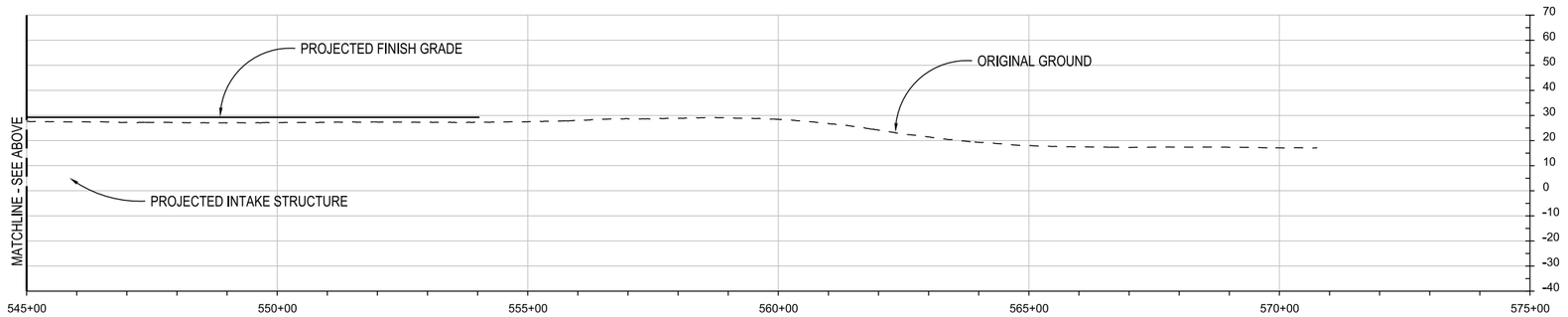

EXISTING HIGHWAY 160/LEVEE CENTERLINE AT INTAKE 5

PROFILE - CONTINUED

1"=150'

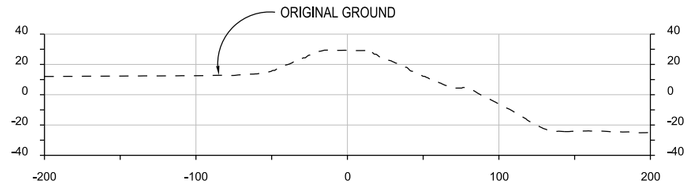

EXISTING HIGHWAY 160/LEVEE CENTERLINE AT INTAKE 5

SECTION - STA 510+00

1"=50'

NOTE:

1. CYLINDRICAL TEE SCREEN STRUCTURE SHOWN.

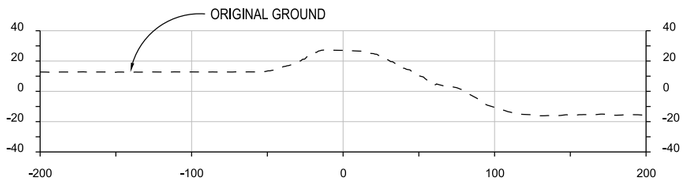

EXISTING HIGHWAY 160/LEVEE CENTERLINE AT INTAKE 5

SECTION - STA 520+00

1"=50'

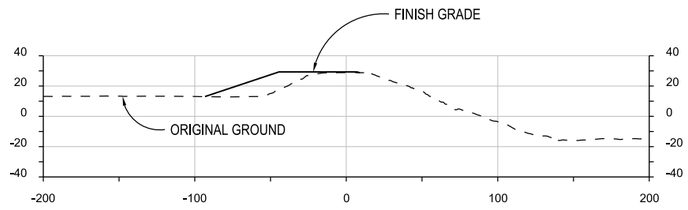

EXISTING HIGHWAY 160/LEVEE CENTERLINE AT INTAKE 5

SECTION - STA 530+00

1"=50'

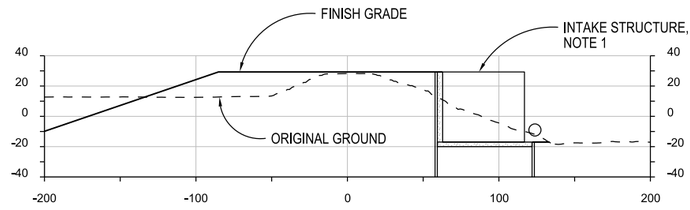

EXISTING HIGHWAY 160/LEVEE CENTERLINE AT INTAKE 5

SECTION - STA 540+00

1"=50'

INTAKES

VERIFY SCALE
BAR IS ONE INCH ON ORIGINAL DRAWING.
0 1"

REV	DATE	DESCRIPTION	SUB.	APPD
	SEP 2024	DELTA CONVEYANCE PROJECT CONCEPT ENGINEERING REPORT DRAWINGS		

DESIGNED: B CHELONIS
DRAWN: B CHELONIS
CHECKED: J JUNKERT
APPROVAL RECOMMENDED:
APPROVAL BY: A MURDOCK

CONCEPT PLANNING DOCUMENT

NOT FOR CONSTRUCTION

DELTA CONVEYANCE DESIGN & CONSTRUCTION AUTHORITY

DELTA CONVEYANCE PROJECT
CONCEPT ENGINEERING REPORT

INTAKE 5 - EXISTING LEVEE PROFILE AND CROSS SECTIONS W/ FINISH GRADE

PROJECT NO. W8X97000

SHEET NO. CER-C-2003IT

REV | SEQUENCE NO. 31

CER-C-2003IT_W8X97000.dgn

PLOT DATE:10/7/2024 PLOT TIME:2:49:52 PM

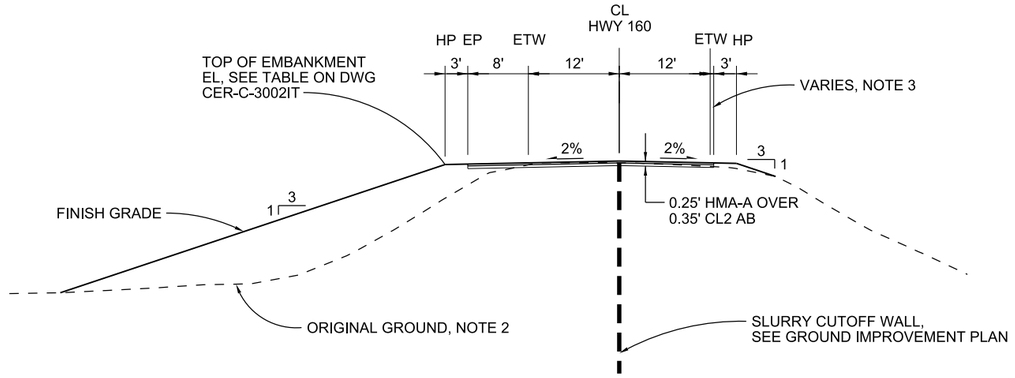

TYPICAL 2-LANE HWY 160 SECTION

1'=10'

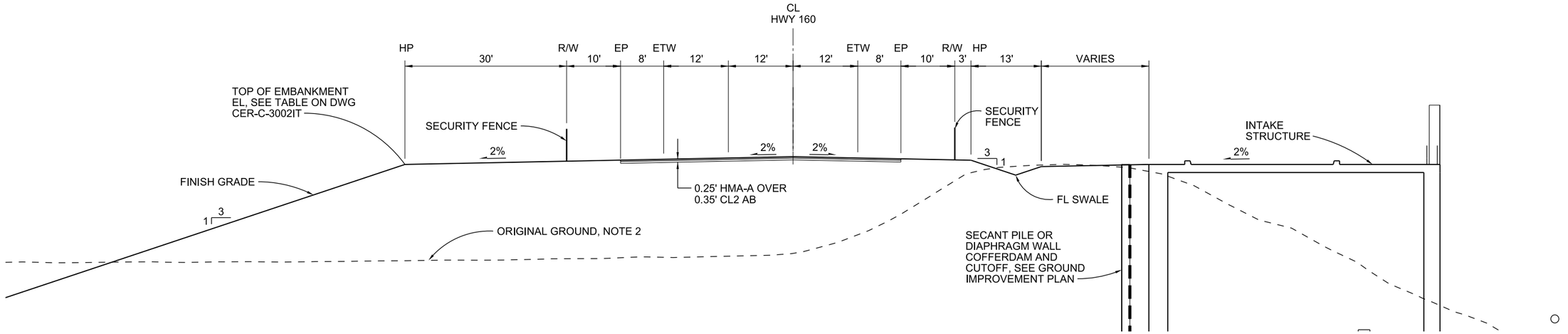

TYPICAL 3-LANE HWY 160 SECTION

1'=10'

NOTES:

1. INTAKE 3 STRUCTURE SHOWN. INTAKE 5 SIMILAR.
2. STRIPPING DEPTH OF 1' NOT SHOWN.
3. ADJUST WIDTH OF SHOULDER, UP TO 8' MAX, TO KEEP 3' CLEAR TO HINGE POINT. AVOID FILLING BELOW THE EXISTING TOP OF EMBANKMENT.

INTAKES

VERIFY SCALE
BAR IS ONE INCH ON ORIGINAL DRAWING.
0 1"

REV	DATE	DESCRIPTION	SUB.	APPD
	SEP 2024	DELTA CONVEYANCE PROJECT CONCEPT ENGINEERING REPORT DRAWINGS		

DESIGNED: J REYNOLDS
DRAWN: B CHELONIS
CHECKED: J JUNKERT
APPROVAL RECOMMENDED:
APPROVAL BY: A MURDOCK

CONCEPT PLANNING DOCUMENT

NOT FOR CONSTRUCTION

DELTA CONVEYANCE DESIGN & CONSTRUCTION AUTHORITY

DELTA CONVEYANCE PROJECT
CONCEPT ENGINEERING REPORT

HIGHWAY 160 TYPICAL SECTIONS AT INTAKE REALIGNMENTS

PROJECT NO. W8X97000
SHEET NO. CER-C-3001IT
REV
SEQUENCE NO. 32

CER-C-3001IT_W8X97000.dgn

PLOT DATE:10/7/2024 PLOT TIME:2:54:23 PM

NOTES:

1. STRIPPING DEPTH OF 1' WITHIN THE FOOTPRINT OF IMPROVEMENTS NOT SHOWN, TYPICAL FOR ALL SECTIONS ON THIS DRAWING.
2. ENERGY DISSIPATION AND HYDRAULIC GUIDES TO BE DETERMINED DURING DETAILED DESIGN.
3. FOR JURISDICTIONAL LEVEE TYPICAL SECTION, SEE CER-C-3003IT
4. INTAKE 3 STRUCTURE SHOWN. INTAKE 5 SIMILAR.

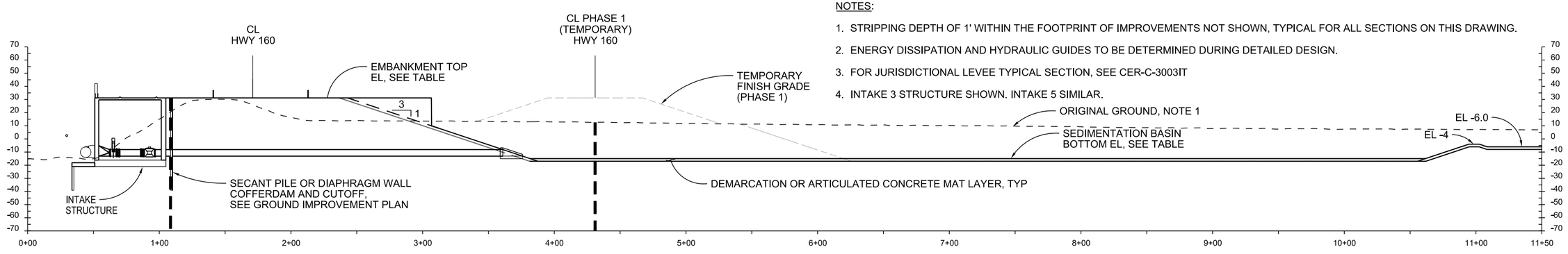

STA 0+00 TO 11+50

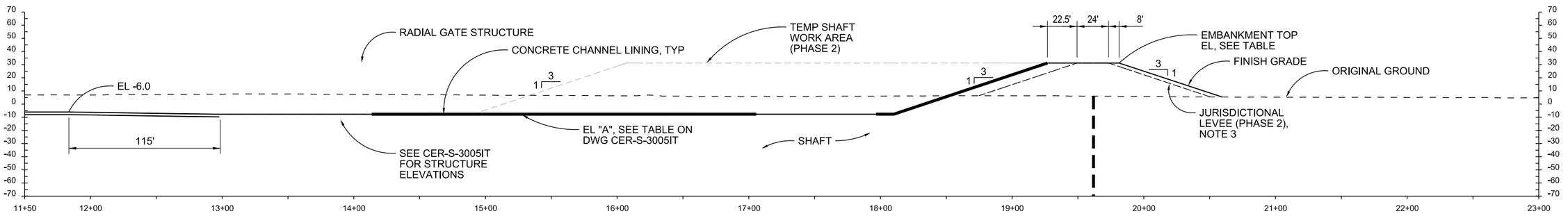

STA 11+50 TO 23+00

A SECTION
1"=40'
VARIES, SEE PLANS

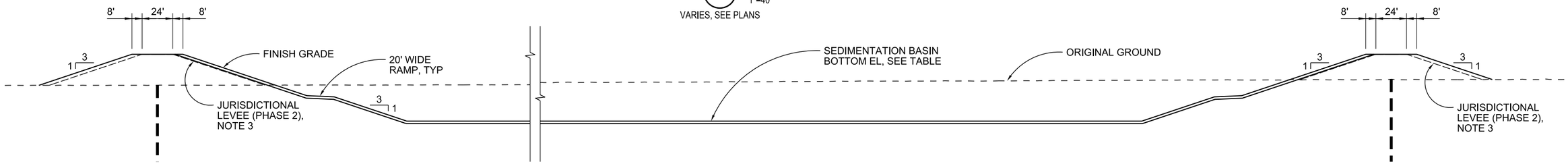

B SECTION
1"=40'
VARIES, SEE PLANS

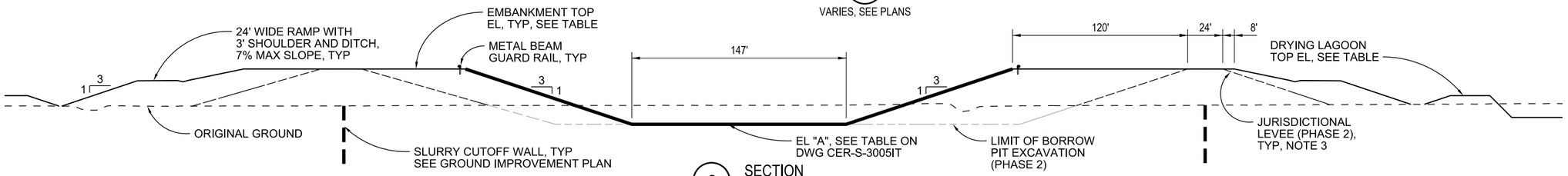

C SECTION
1"=40'
VARIES, SEE PLANS

SITE ELEVATION TABLE

INTAKE	EMBANKMENT TOP EL	SEDIMENTATION BASIN BOTTOM EL	DRYING LAGOON TOP EL
IT3 TEE	31.2	-15.0	11.5
IT5 TEE	30.3	-22.0	12.0

INTAKES

VERIFY SCALE
BAR IS ONE INCH ON ORIGINAL DRAWING.
0 1"

REV	DATE	DESCRIPTION	SUB.	APPD
	SEP 2024	DELTA CONVEYANCE PROJECT CONCEPT ENGINEERING REPORT DRAWINGS		

DESIGNED: J REYNOLDS
DRAWN: B CHELONIS
CHECKED: J JUNKERT
APPROVAL RECOMMENDED:
APPROVAL BY: A MURDOCK

CONCEPT PLANNING DOCUMENT
NOT FOR CONSTRUCTION

DELTA CONVEYANCE DESIGN & CONSTRUCTION AUTHORITY

DELTA CONVEYANCE PROJECT
CONCEPT ENGINEERING REPORT

SITE SECTIONS

PROJECT NO. W8X97000
SHEET NO. CER-C-3002IT
REV
SEQUENCE NO. 33

CER-C-3002IT_W8X97000.dgn

PLOT DATE:10/7/2024 PLOT TIME:3:55:41 PM

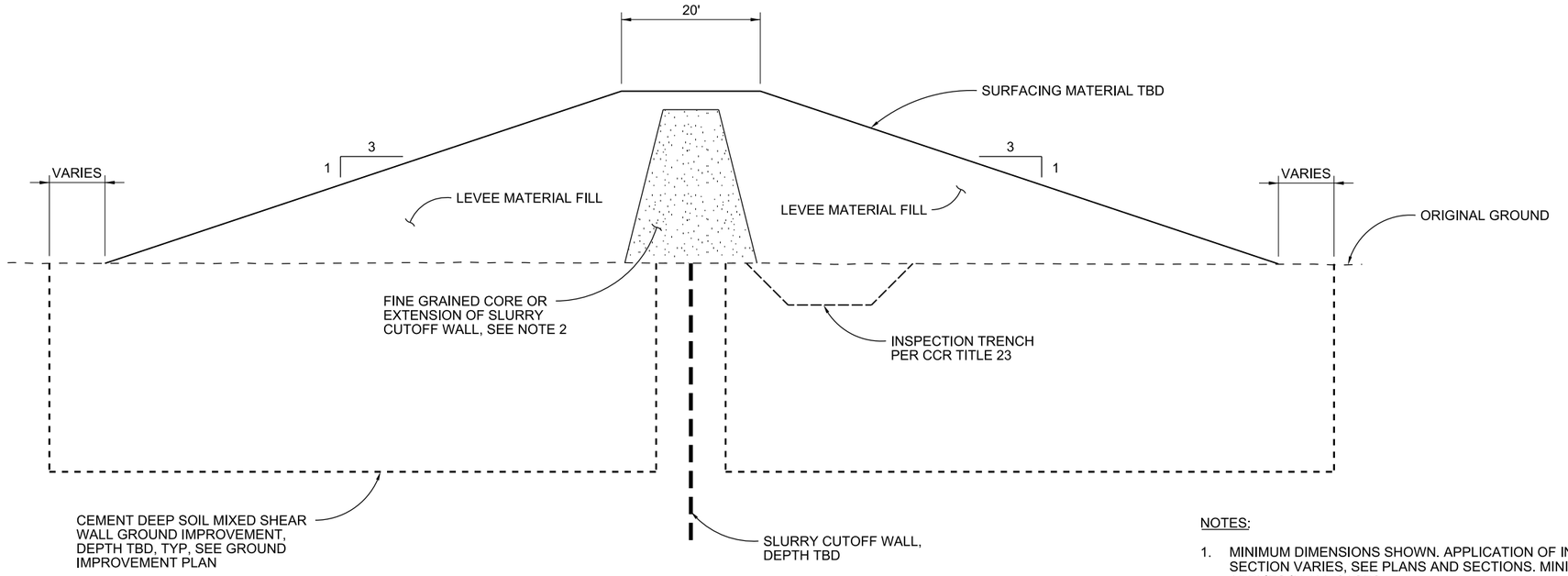

TYPICAL MINIMUM JURISDICTIONAL LEVEE SECTION
NTS

NOTES:

1. MINIMUM DIMENSIONS SHOWN. APPLICATION OF INTAKE LEVEE SECTION VARIES, SEE PLANS AND SECTIONS. MINIMUM SECTION APPLIES IN ALL CASES.
2. LEVEE CORE, SLURRY WALL, AND FILL REQUIREMENTS TO BE DETERMINED DURING DESIGN PER GEOTECHNICAL CONDITIONS.
3. MINIMUM JURISDITIONAL LEVEE SECTION APPLICABLE TO ALL TEMPORARY AND PERMANENT LEVEES.

INTAKES

VERIFY SCALE
BAR IS ONE INCH ON ORIGINAL DRAWING.
0 1"

REV	DATE	DESCRIPTION	SUB.	APPD
	SEP 2024	DELTA CONVEYANCE PROJECT CONCEPT ENGINEERING REPORT DRAWINGS		

DESIGNED
DRAWN B CHELONIS
CHECKED J JUNKERT
APPROVAL RECOMMENDED
APPROVAL BY

CONCEPT PLANNING DOCUMENT

NOT FOR CONSTRUCTION

DELTA CONVEYANCE DESIGN & CONSTRUCTION AUTHORITY

DELTA CONVEYANCE PROJECT
CONCEPT ENGINEERING REPORT

TYPICAL MINIMUM JURISDICTIONAL LEVEE SECTION

PROJECT NO. W8X97000
SHEET NO. CER-C-3003IT
REV
SEQUENCE NO. 34

CER-C-3003IT_W8X97000.dgn

PLOT DATE:10/7/2024 PLOT TIME:2:53:25 PM

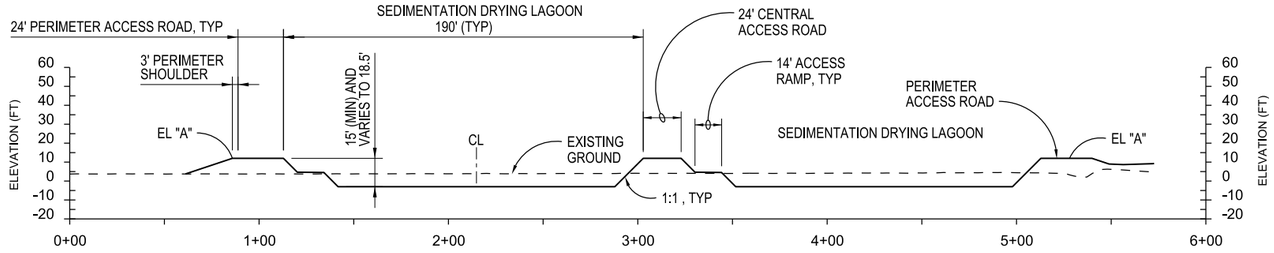

A SECTION
1"=40'
CER-C-1030IT

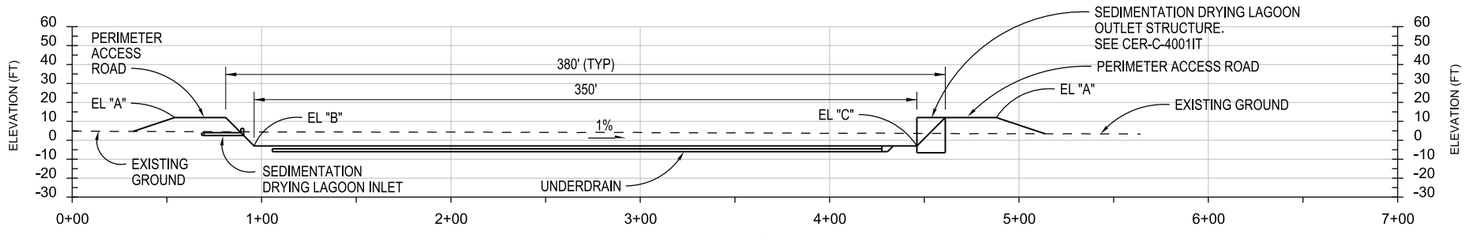

B SECTION
1"=40'
CER-C-1030IT

NOTES:

1. SEDIMENTATION DRYING LAGOON SECTIONS REPRESENT A TYPICAL SITE. ORIGINAL GROUND ELEVATIONS AND TOP OF EMBANKMENT (EL "A") ELEVATIONS VARY BY SITE. SEE TABLE FOR SPECIFIC SITE FINISH GRADE ELEVATIONS.

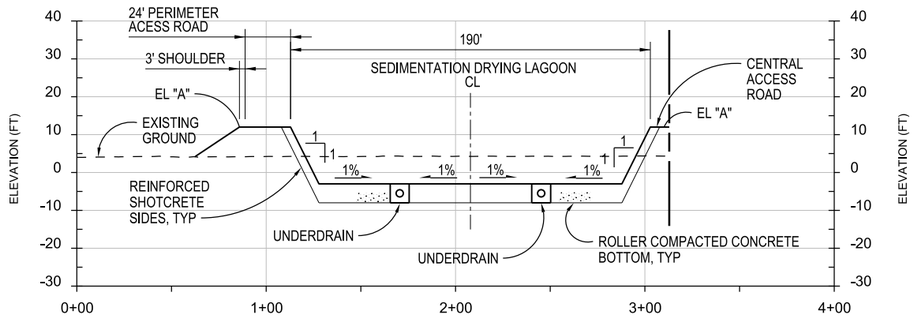

C SECTION
NTS
CER-C-1030IT

FINISH GRADE ELEVATION TABLE

LOCATION	A	B	C
INTAKE 3	11.0	-4.0	-7.5
INTAKE 5	10.0	-5.0	-8.5

INTAKES

VERIFY SCALE
BAR IS ONE INCH ON ORIGINAL DRAWING.
0 1"

REV	DATE	DESCRIPTION	SUB.	APPD
	SEP 2024	DELTA CONVEYANCE PROJECT CONCEPT ENGINEERING REPORT DRAWINGS		

DESIGNED: J REYNOLDS
APPROVAL RECOMMENDED:
DRAWN: D CORBETT
APPROVAL BY: A MURDOCK
CHECKED: J JUNKERT

CONCEPT PLANNING DOCUMENT
NOT FOR CONSTRUCTION

DELTA CONVEYANCE DESIGN & CONSTRUCTION AUTHORITY

DELTA CONVEYANCE PROJECT
CONCEPT ENGINEERING REPORT

SEDIMENTATION DRYING LAGOON TYPICAL SECTIONS

PROJECT NO. W8X97000
SHEET NO. CER-C-3030IT
REV
SEQUENCE NO. 35

CER-C-3030IT_W8X97000.dgn

PLOT DATE:10/7/2024 PLOT TIME:2:50:03 PM

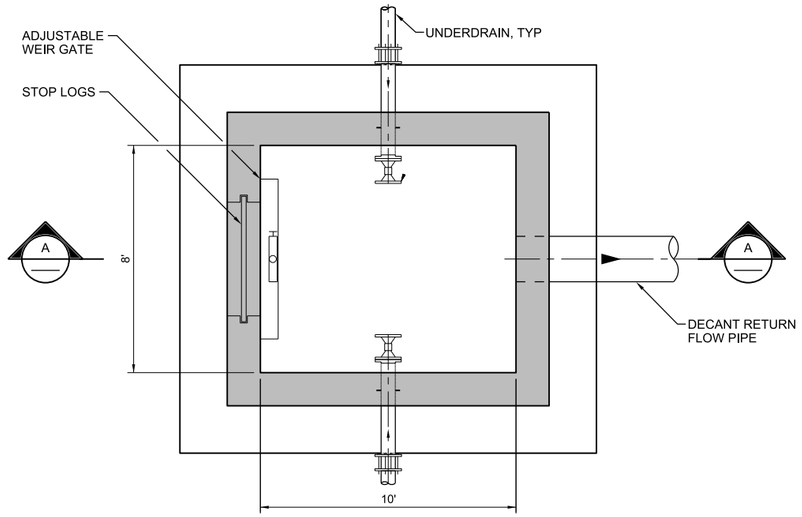

SOLIDS LAGOON OUTLET STRUCTURE

PLAN
3/8"=1'-0"

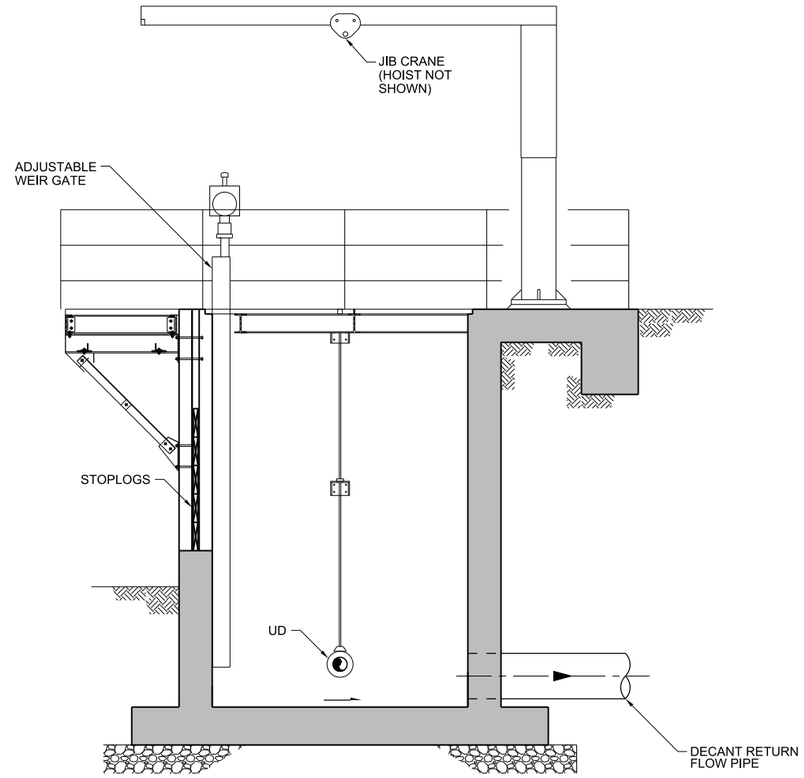

A SECTION
3/8"=1'-0"

INTAKES

REV	DATE	DESCRIPTION	SUB.	APPD
	SEP 2024	DELTA CONVEYANCE PROJECT CONCEPT ENGINEERING REPORT DRAWINGS		

DESIGNED: J REYNOLDS
DRAWN: D CORBETT
CHECKED: J JUNKERT
APPROVAL RECOMMENDED:
APPROVAL BY: A MURDOCK

CONCEPT PLANNING DOCUMENT

NOT FOR CONSTRUCTION

DELTA CONVEYANCE DESIGN & CONSTRUCTION AUTHORITY

DELTA CONVEYANCE PROJECT
CONCEPT ENGINEERING REPORT

SEDIMENTATION DRYING LAGOON
OUTLET STRUCTURE TYPICAL PLAN AND SECTION

VERIFY SCALE
BAR IS ONE INCH ON ORIGINAL DRAWING.
0 1"

PROJECT NO. W8X97000
SHEET NO. CER-C-4001IT
REV
SEQUENCE NO. 36

CER-C-4001IT_W8X97000.dgn

PLOT DATE:10/7/2024 PLOT TIME:2:49:42 PM

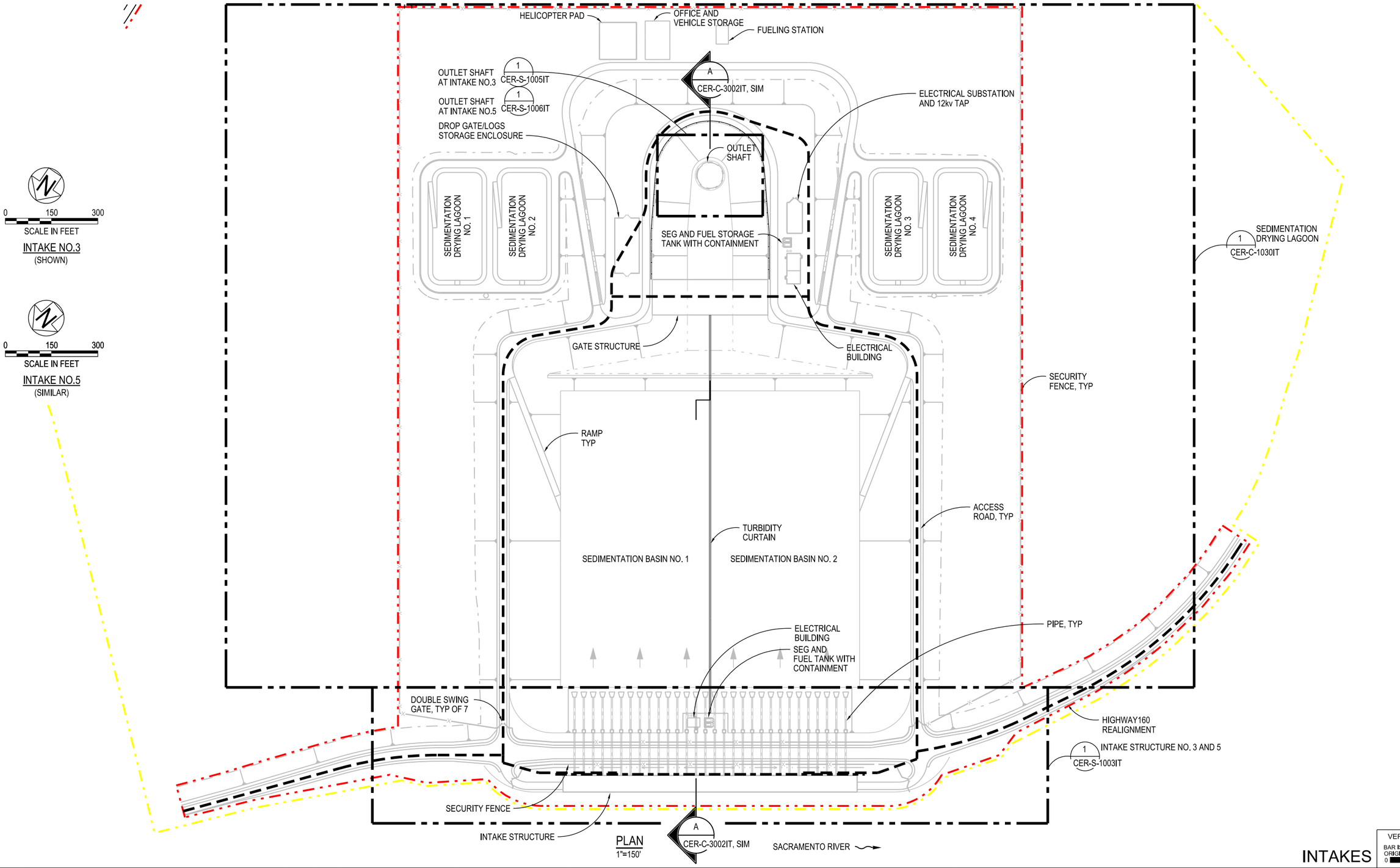

PLAN
1"=150'

INTAKES

VERIFY SCALE
BAR IS ONE INCH ON ORIGINAL DRAWING.
0 1"

REV	DATE	DESCRIPTION	SUB.	APPD
	SEP 2024	DELTA CONVEYANCE PROJECT CONCEPT ENGINEERING REPORT DRAWINGS		

DESIGNED
APPROVAL RECOMMENDED
DRAWN J SMITH
APPROVAL BY A MURDOCK
CHECKED J JUNKERT

CONCEPT PLANNING DOCUMENT

NOT FOR CONSTRUCTION

DELTA CONVEYANCE DESIGN & CONSTRUCTION AUTHORITY

DELTA CONVEYANCE PROJECT
CONCEPT ENGINEERING REPORT

TYPICAL TEE SCREEN INTAKE FACILITY GENERAL ARRANGEMENT & KEY PLAN

PROJECT NO. W8X97000
SHEET NO. CER-S-1002IT
REV
SEQUENCE NO. 37

CER-S-1002IT_W8X97000.dgn

PLOT DATE:10/7/2024 PLOT TIME:2:54:17 PM

TRAINING WALL DIMENSIONS							
	"A"	"B"	"C"	"D"	"E"	"F"	"G"
INTAKE 3	165	92	119	180	86	114	1520
INTAKE 5	174	83	83	172	101	97	1478

LEGEND

(#) TEE SCREEN NO.

SITE	DESIGN WSE (FT)	RIVER BOTTOM (FT)	TEE SCREEN DIAMETER (FT)	TEE SCREEN BOTTOM (FT)	NUMBER VALVE CONFIGURATIONS	STRUCTURE LENGTH (FT)
C-E-3	3.72	-25	8	-13	30	964
C-E-5	3.61	-17	8	-13	30	964

SEE CIVIL SHEETS FOR CONTINUATION

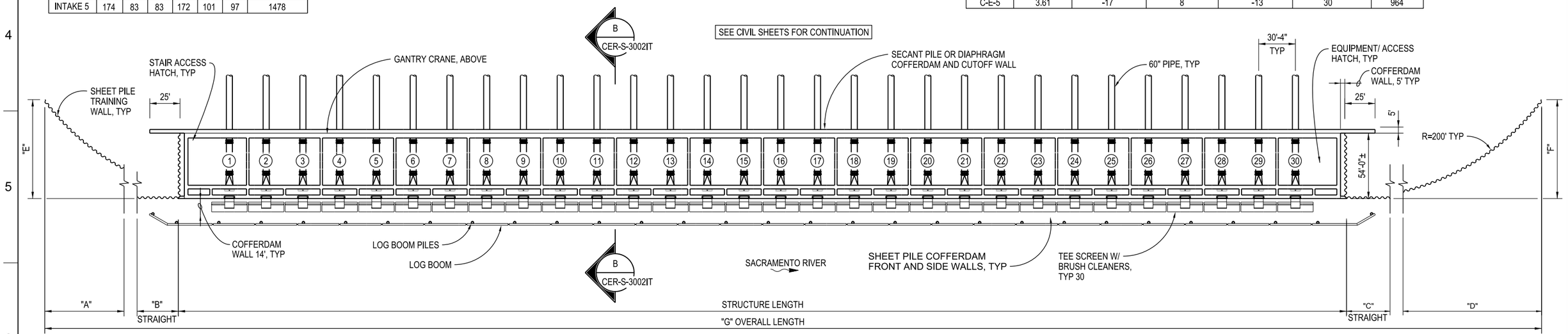

TYPICAL INTAKE STRUCTURE

1 PLAN
1"=40'
CER-S-3002IT

INTAKES

VERIFY SCALE
BAR IS ONE INCH ON ORIGINAL DRAWING.
0 1"

REV	DATE	DESCRIPTION	SUB.	APPD
	SEP 2024	DELTA CONVEYANCE PROJECT CONCEPT ENGINEERING REPORT DRAWINGS		

DESIGNED P RYAN
DRAWN J SMITH
CHECKED J JUNKERT
APPROVAL RECOMMENDED
APPROVAL BY A MURDOCK

CONCEPT PLANNING DOCUMENT

NOT FOR CONSTRUCTION

DELTA CONVEYANCE DESIGN & CONSTRUCTION AUTHORITY

DELTA CONVEYANCE PROJECT
CONCEPT ENGINEERING REPORT

TYPICAL TEE SCREEN INTAKE STRUCTURE PLAN

PROJECT NO. W8X97000
SHEET NO. CER-S-1003IT
REV
SEQUENCE NO. 38

CER-S-1003IT_W8X97000.dgn

PLOT DATE:10/7/2024 PLOT TIME:2:50:17 PM

ANSI_D.DWG

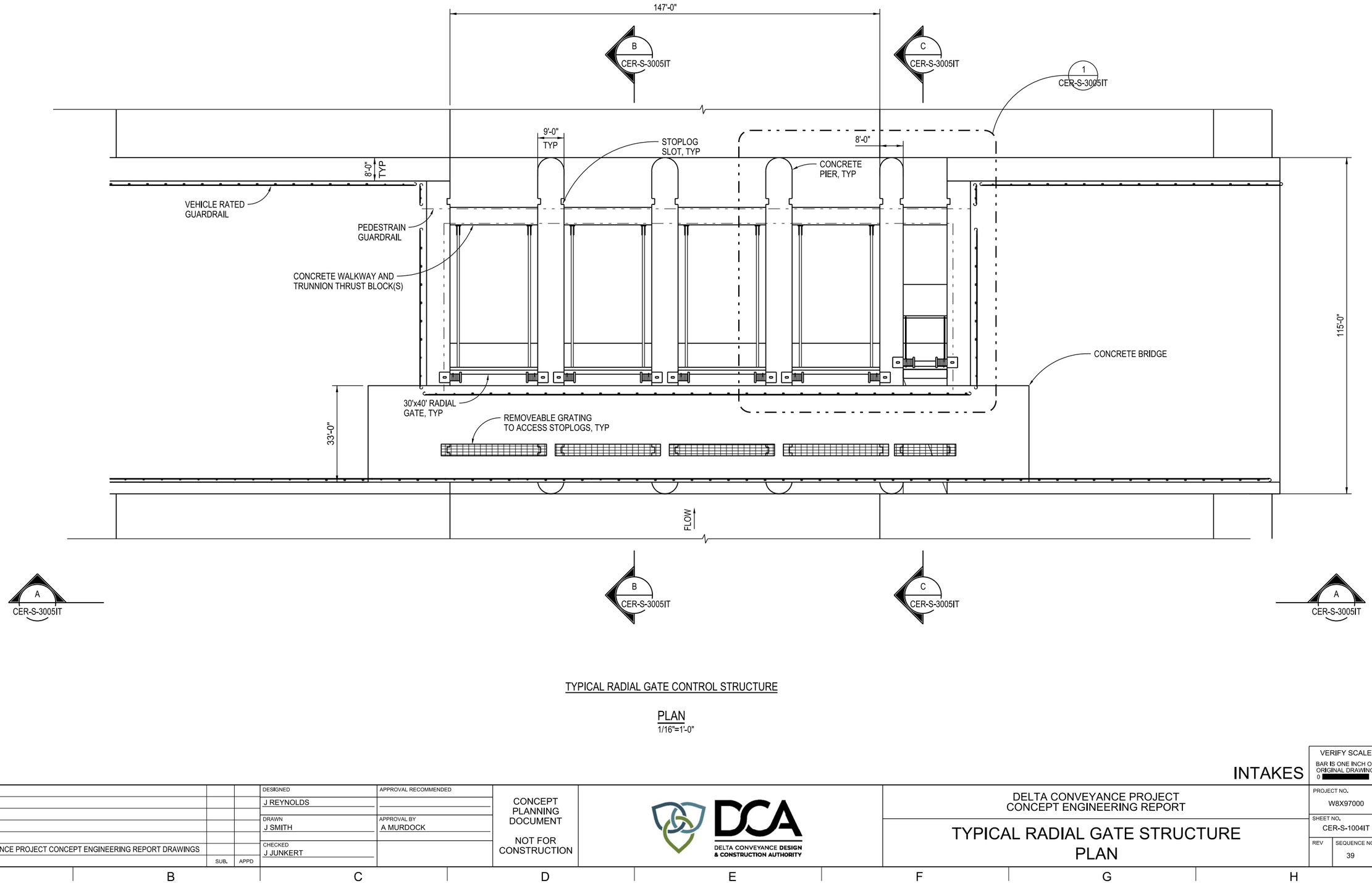

TYPICAL RADIAL GATE CONTROL STRUCTURE

PLAN

1/16"=1'-0"

INTAKES

VERIFY SCALE
BAR IS ONE INCH ON ORIGINAL DRAWING.
0 1"

REV	DATE	DESCRIPTION	SUB.	APPD
	SEP 2024	DELTA CONVEYANCE PROJECT CONCEPT ENGINEERING REPORT DRAWINGS		

DESIGNED: J REYNOLDS
DRAWN: J SMITH
CHECKED: J JUNKERT
APPROVAL RECOMMENDED:
APPROVAL BY: A MURDOCK

CONCEPT PLANNING DOCUMENT

NOT FOR CONSTRUCTION

DELTA CONVEYANCE DESIGN & CONSTRUCTION AUTHORITY

DELTA CONVEYANCE PROJECT
CONCEPT ENGINEERING REPORT

TYPICAL RADIAL GATE STRUCTURE PLAN

PROJECT NO. W8X97000
SHEET NO. CER-S-1004IT
REV
SEQUENCE NO. 39

CER-S-1004IT_W8X97000.dgn

PLOT DATE:10/7/2024 PLOT TIME:2:53:46 PM

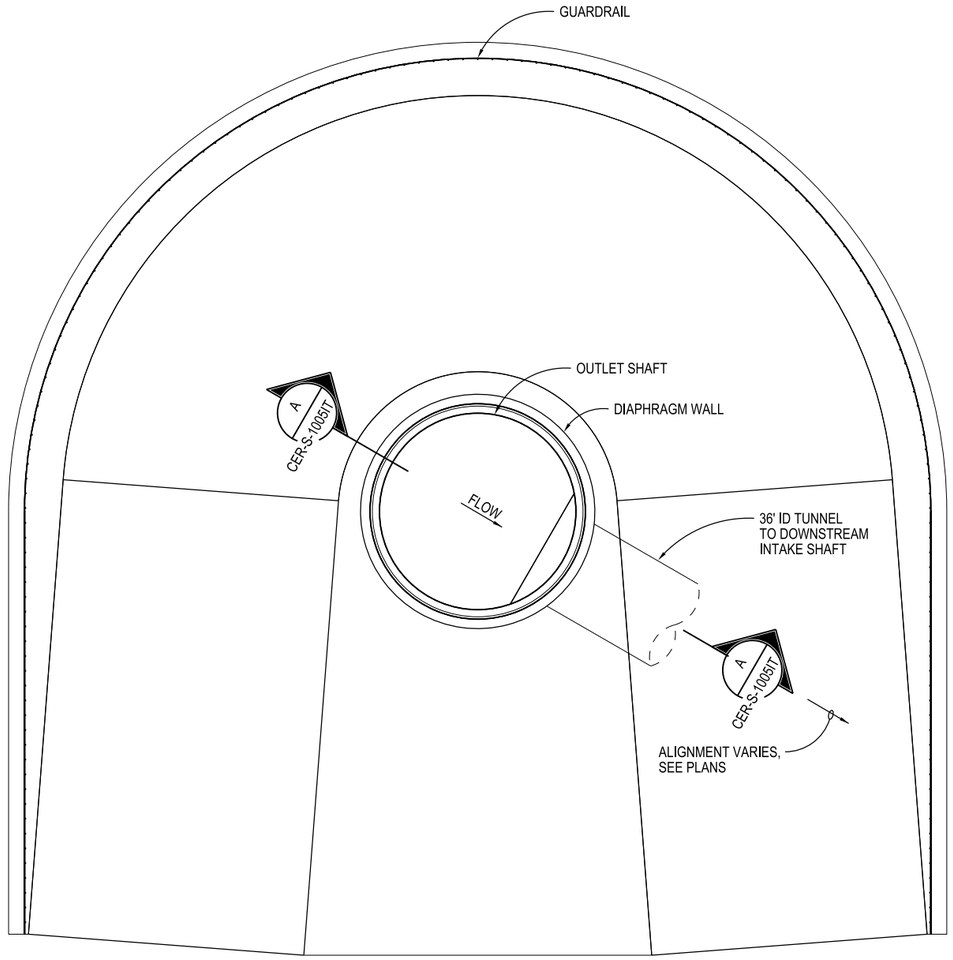

TYPICAL SINGLE TUNNEL CONNECTION OUTLET SHAFT

PLAN
1/32"=1'-0"

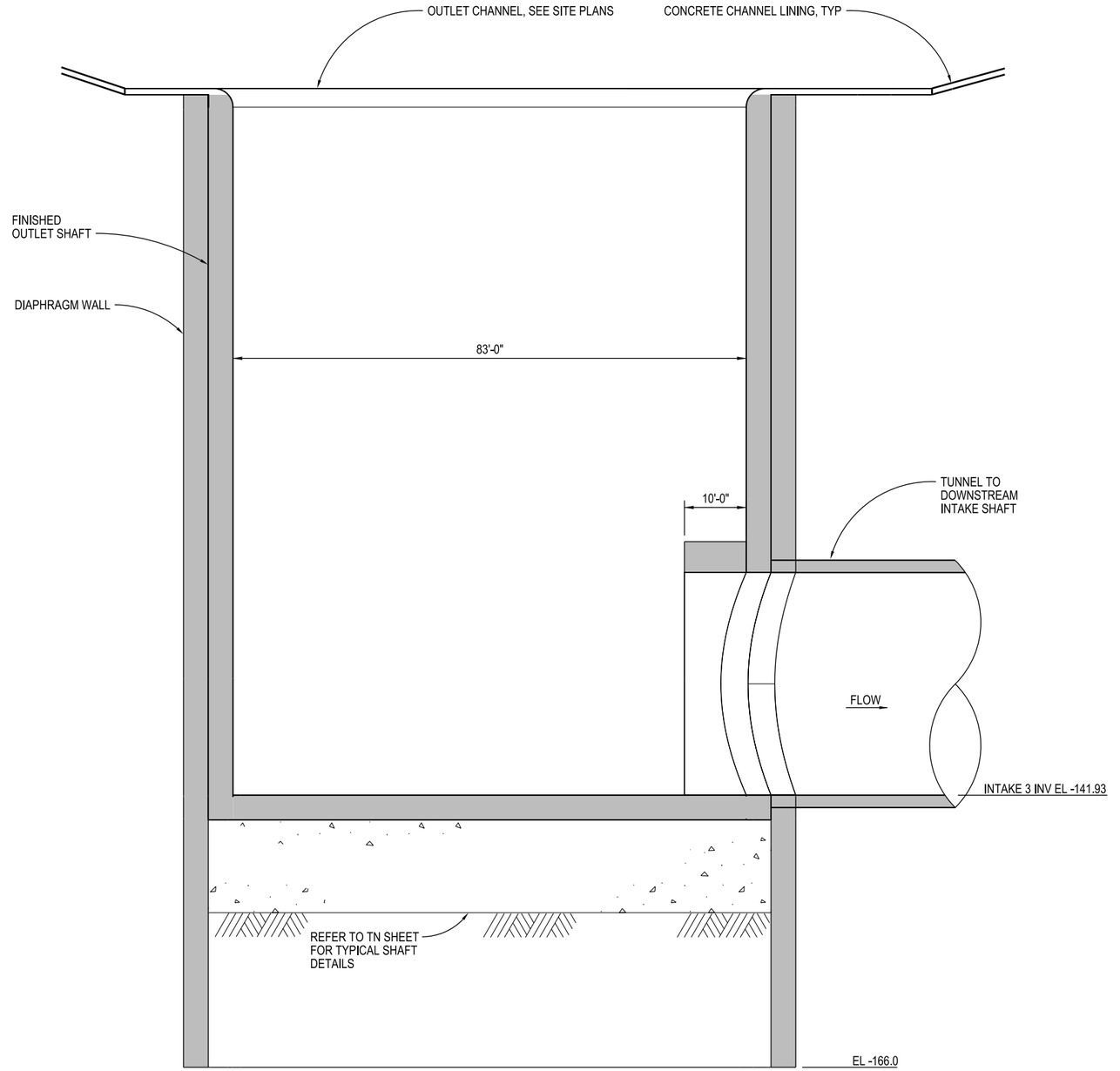

A SECTION
3/32"=1'-0"

NOTE:

1. ENERGY DISSIPATION AND HYDRAULIC GUIDES TO BE DETERMINED DURING DETAILED DESIGN.

INTAKES

VERIFY SCALE
BAR IS ONE INCH ON ORIGINAL DRAWING.
0 1"

REV	DATE	DESCRIPTION	SUB.	APPD
	SEP 2024	DELTA CONVEYANCE PROJECT CONCEPT ENGINEERING REPORT DRAWINGS		

DESIGNED: J REYNOLDS
DRAWN: J SMITH
CHECKED: J JUNKERT
APPROVAL RECOMMENDED:
APPROVAL BY: A MURDOCK

CONCEPT PLANNING DOCUMENT

NOT FOR CONSTRUCTION

DELTA CONVEYANCE DESIGN & CONSTRUCTION AUTHORITY

DELTA CONVEYANCE PROJECT
CONCEPT ENGINEERING REPORT

INTAKE 3 OUTLET STRUCTURE TUNNEL CONNECTION - PLAN AND SECTION

PROJECT NO. W8X97000
SHEET NO. CER-S-1005IT
REV
SEQUENCE NO. 40

CER-S-1005IT_W8X97000.dgn

PLOT DATE:10/7/2024 PLOT TIME:2:50:23 PM

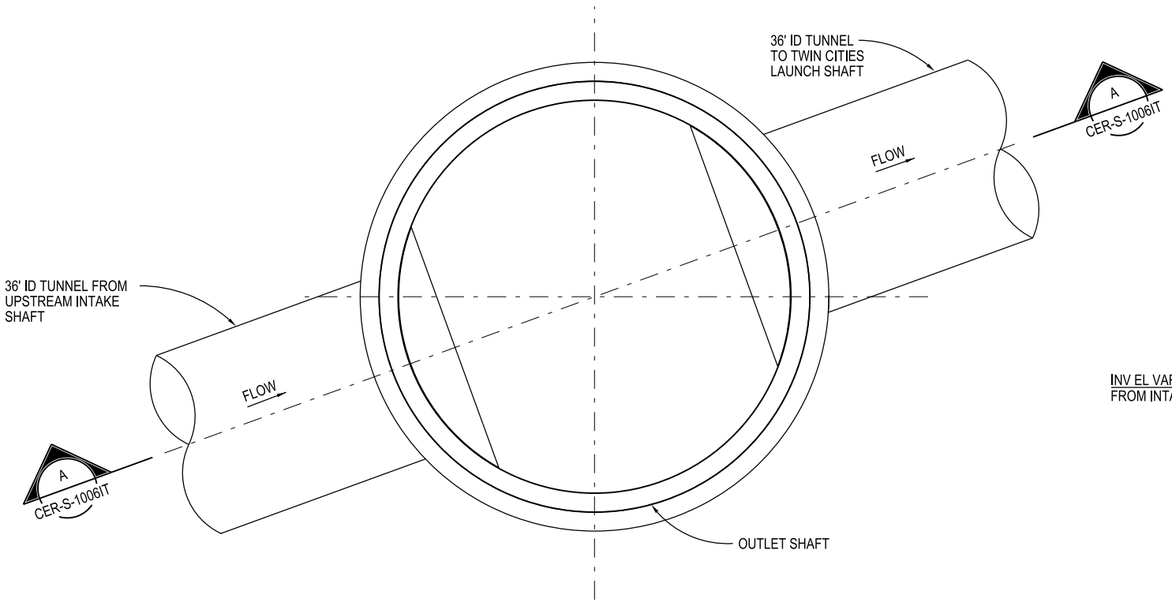

PLAN
1/16"=1'-0"

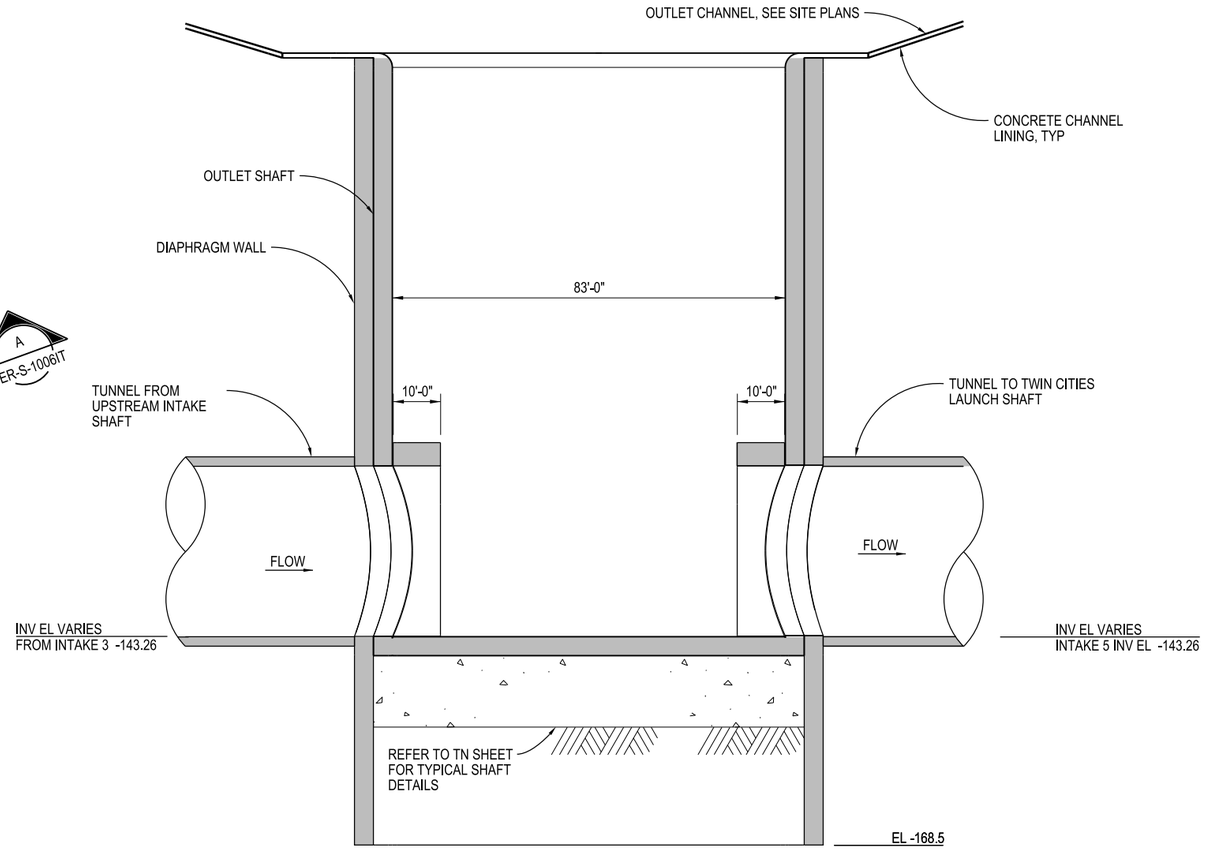

OUTLET SHAFT / JUNCTION STRUCTURE

A SECTION
1/16"=1'-0"

NOTE:

1. ENERGY DISSIPATION AND HYDRAULIC GUIDES TO BE DETERMINED DURING DETAILED DESIGN.

CER-S-1006IT_W8X97000.dgn

REV	DATE	DESCRIPTION	SUB.	APPD
	SEP 2024	DELTA CONVEYANCE PROJECT CONCEPT ENGINEERING REPORT DRAWINGS		

DESIGNED: J REYNOLDS
DRAWN: J SMITH
CHECKED: J JUNKERT
APPROVAL RECOMMENDED:
APPROVAL BY: A MURDOCK

CONCEPT PLANNING DOCUMENT

NOT FOR CONSTRUCTION

DELTA CONVEYANCE DESIGN & CONSTRUCTION AUTHORITY

DELTA CONVEYANCE PROJECT
CONCEPT ENGINEERING REPORT

INTAKE 5 OUTLET STRUCTURE TUNNEL CONNECTION - PLAN AND SECTION

INTAKES

VERIFY SCALE
BAR IS ONE INCH ON ORIGINAL DRAWING.
0 1"

PROJECT NO. W8X97000
SHEET NO. CER-S-1006IT
REV
SEQUENCE NO. 41

PLOT DATE:10/7/2024 PLOT TIME:2:54:02 PM

SCHEDULE								
INTAKE NO.	200-YR FLOOD WSE W/ CC + SLR	DESIGN WSE	AVG RIVER BOT EL	A	B	C	D	E
3	27.3	3.72	-25	30.3	-13	-17.0	-100	-14
5	26.3	3.61	-17	29.3	-13	-17.0	-100	-14

ELEVATIONS SHOWN ARE BASED ON NAVD 88

NOTE:

1 GROUND IMPROVEMENT EXTENTS AND DEPTHS AND ALL TIP ELEVATIONS ARE PRELIMINARY AND BASED ON LIMITED GEOTECHNICAL DATA. FINAL EXTENTS AND ELEVATIONS ARE SUBJECT TO CHANGE DURING SUBSEQUENT ENGINEERING EFFORTS.

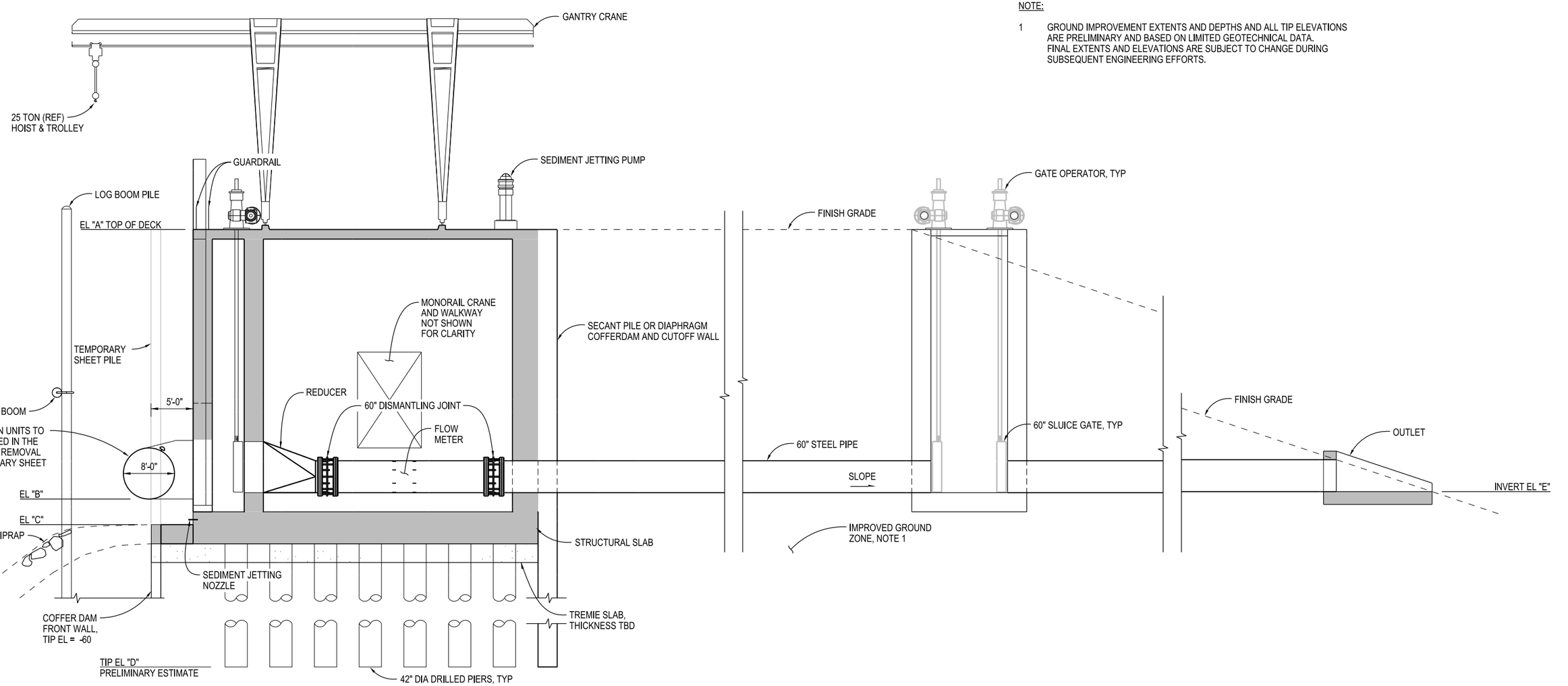

B SECTION
1/8"=1'-0"
CER-S-1003IT

INTAKES

VERIFY SCALE
BAR IS ONE INCH ON ORIGINAL DRAWING.
0 1"

REV	DATE	DESCRIPTION	SUB.	APPD
	SEP 2024	DELTA CONVEYANCE PROJECT CONCEPT ENGINEERING REPORT DRAWINGS		

DESIGNED J REYNOLDS
DRAWN J SMITH
CHECKED J JUNKERT
APPROVAL RECOMMENDED
APPROVAL BY A MURDOCK

CONCEPT PLANNING DOCUMENT
NOT FOR CONSTRUCTION

DELTA CONVEYANCE DESIGN & CONSTRUCTION AUTHORITY

DELTA CONVEYANCE PROJECT
CONCEPT ENGINEERING REPORT

TYPICAL TEE SCREEN INTAKE SECTION

PROJECT NO. W8X97000
SHEET NO. CER-S-3002IT
REV
SEQUENCE NO. 42

CER-S-3002IT_W8X97000.dgn

PLOT DATE:10/7/2024 PLOT TIME:2:50:13 PM

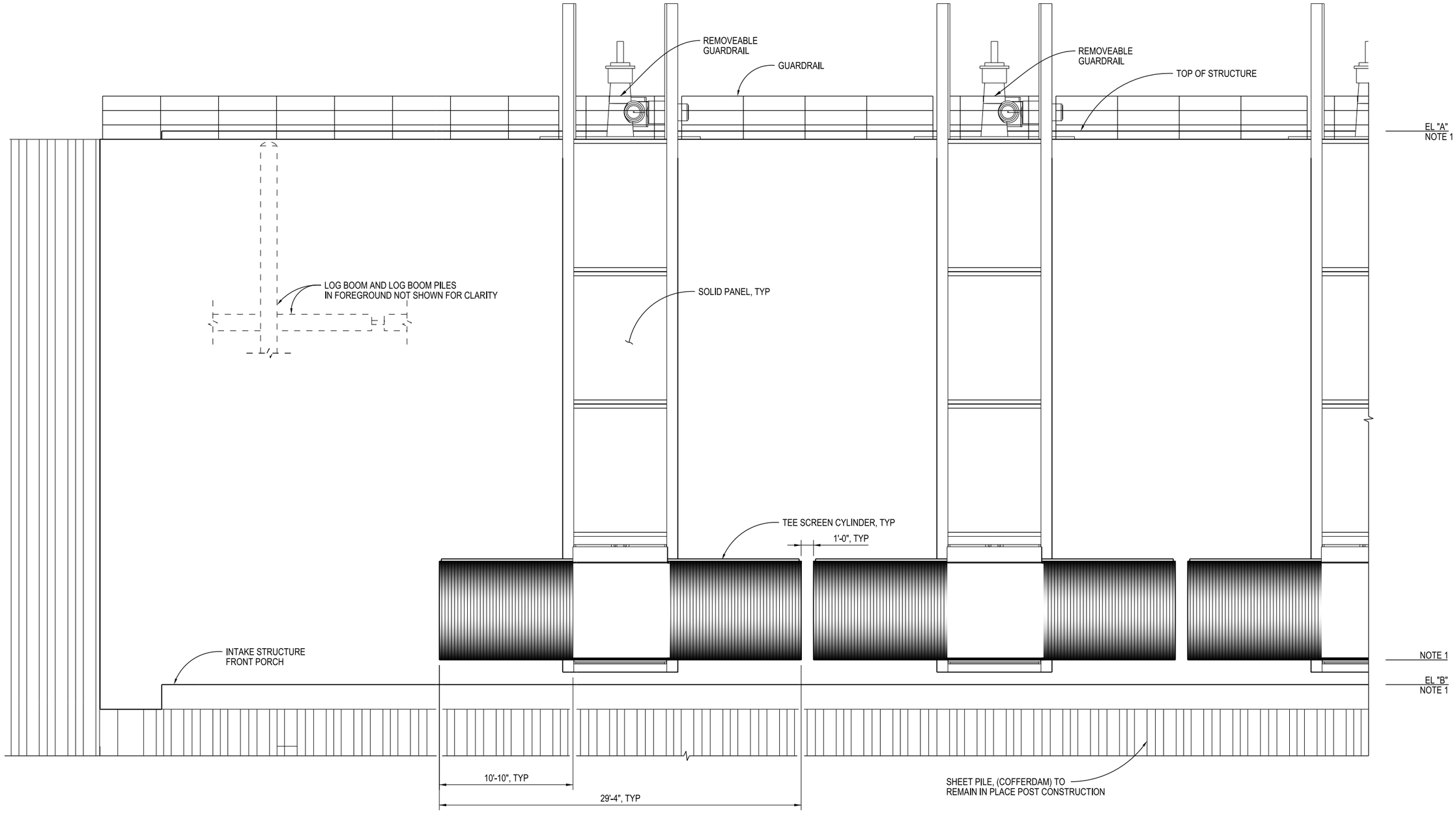

NOTES:

1. SEE ELEVATIONS ON SHEET CER-S-3002IT.
2. JETTING SYSTEM OMITTED FOR CLARITY.

A ELEVATION
1/4"=1'-0"
CER-S-1003

INTAKES

VERIFY SCALE
BAR IS ONE INCH ON ORIGINAL DRAWING.
0 1"

REV	DATE	DESCRIPTION	SUB.	APPD
	SEP 2024	DELTA CONVEYANCE PROJECT CONCEPT ENGINEERING REPORT DRAWINGS		

DESIGNED J REYNOLDS
DRAWN J SMITH
CHECKED J JUNKERT
APPROVAL RECOMMENDED
APPROVAL BY A MURDOCK

CONCEPT PLANNING DOCUMENT
NOT FOR CONSTRUCTION

DELTA CONVEYANCE DESIGN & CONSTRUCTION AUTHORITY

DELTA CONVEYANCE PROJECT
CONCEPT ENGINEERING REPORT

TYPICAL TEE SCREEN INTAKE ELEVATION

PROJECT NO. W8X97000
SHEET NO. CER-S-3004IT
REV
SEQUENCE NO. 43

CER-S-3004IT_W8X97000.dgn

PLOT DATE:10/7/2024 PLOT TIME:2:54:01 PM

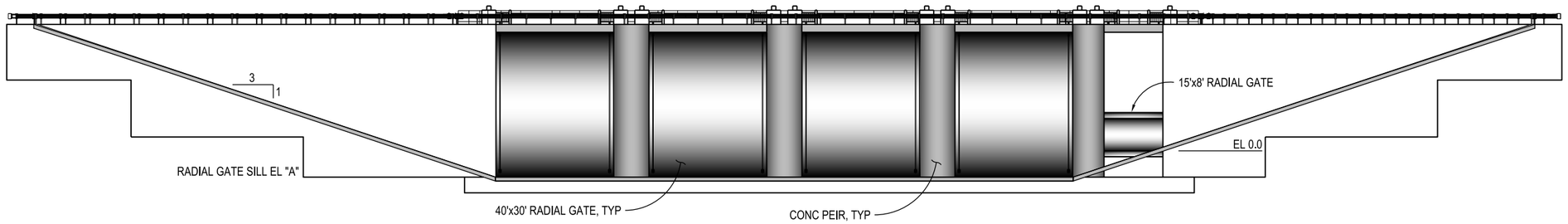

A SECTION
1/16"=1'-0"
CER-S-1004IT

LOCATION	A	B	C	D
INTAKE 3	-8.8	30.3	25.8	2.2
INTAKE 5	-9.0	29.3	24.8	2.0

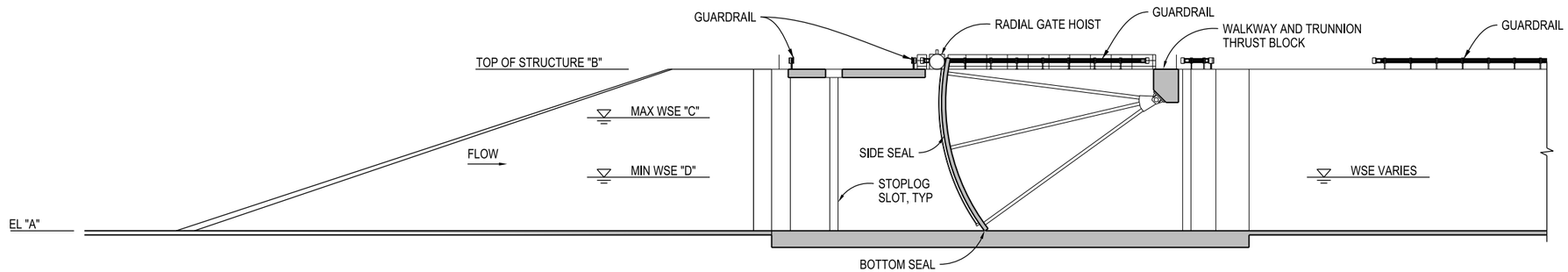

B SECTION
1/16"=1'-0"
CER-S-1004IT

NOTE:
1. ENERGY DISSIPATION AND HYDRAULIC GUIDES TO BE DETERMINED DURING DETAILED DESIGN.

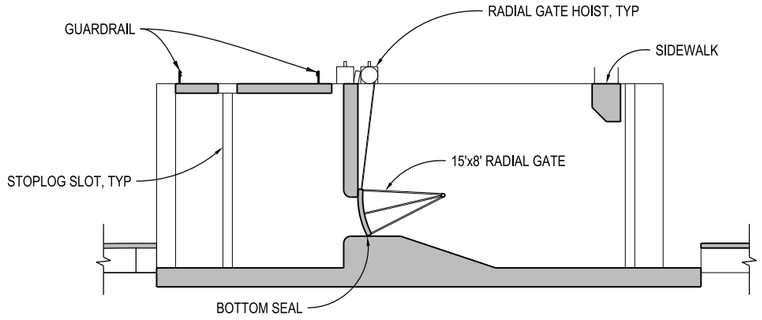

C SECTION
1/16"=1'-0"
CER-S-1004IT

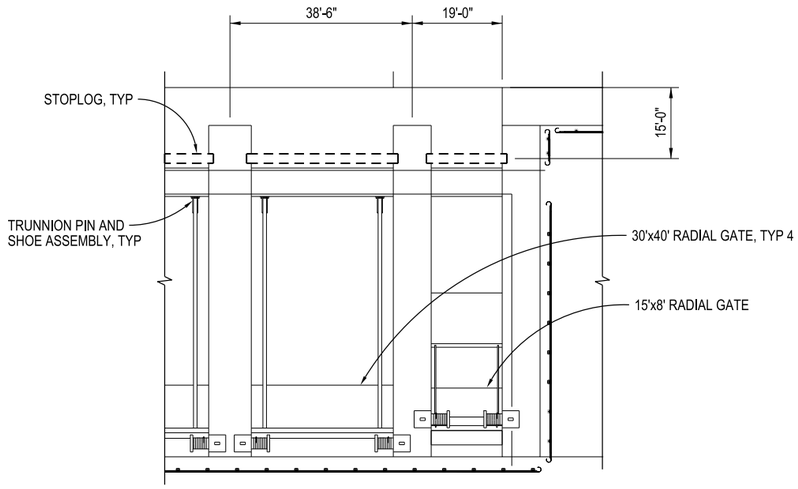

1 DETAIL
1/16"=1'-0"
CER-S-1004IT

INTAKES

VERIFY SCALE
BAR IS ONE INCH ON ORIGINAL DRAWING.
0 1"

REV	DATE	DESCRIPTION	SUB.	APPD
	SEP 2024	DELTA CONVEYANCE PROJECT CONCEPT ENGINEERING REPORT DRAWINGS		

DESIGNED: J REYNOLDS
APPROVAL RECOMMENDED:
DRAWN: J SMITH
APPROVAL BY: A MURDOCK
CHECKED: J JUNKERT

CONCEPT PLANNING DOCUMENT
NOT FOR CONSTRUCTION

DELTA CONVEYANCE DESIGN & CONSTRUCTION AUTHORITY

DELTA CONVEYANCE PROJECT
CONCEPT ENGINEERING REPORT

INTAKES TYPICAL RADIAL GATE STRUCTURE SECTIONS AND DETAIL

PROJECT NO. W8X97000
SHEET NO. CER-S-3005IT
REV
SEQUENCE NO. 44

CER-S-3005IT_W8X97000.dgn
PLOT DATE:10/7/2024 PLOT TIME:2:50:36 PM

NOTE:

1. CRANES AND ACCESS WALKWAYS/ STAIRS NOT SHOWN FOR CLARITY.

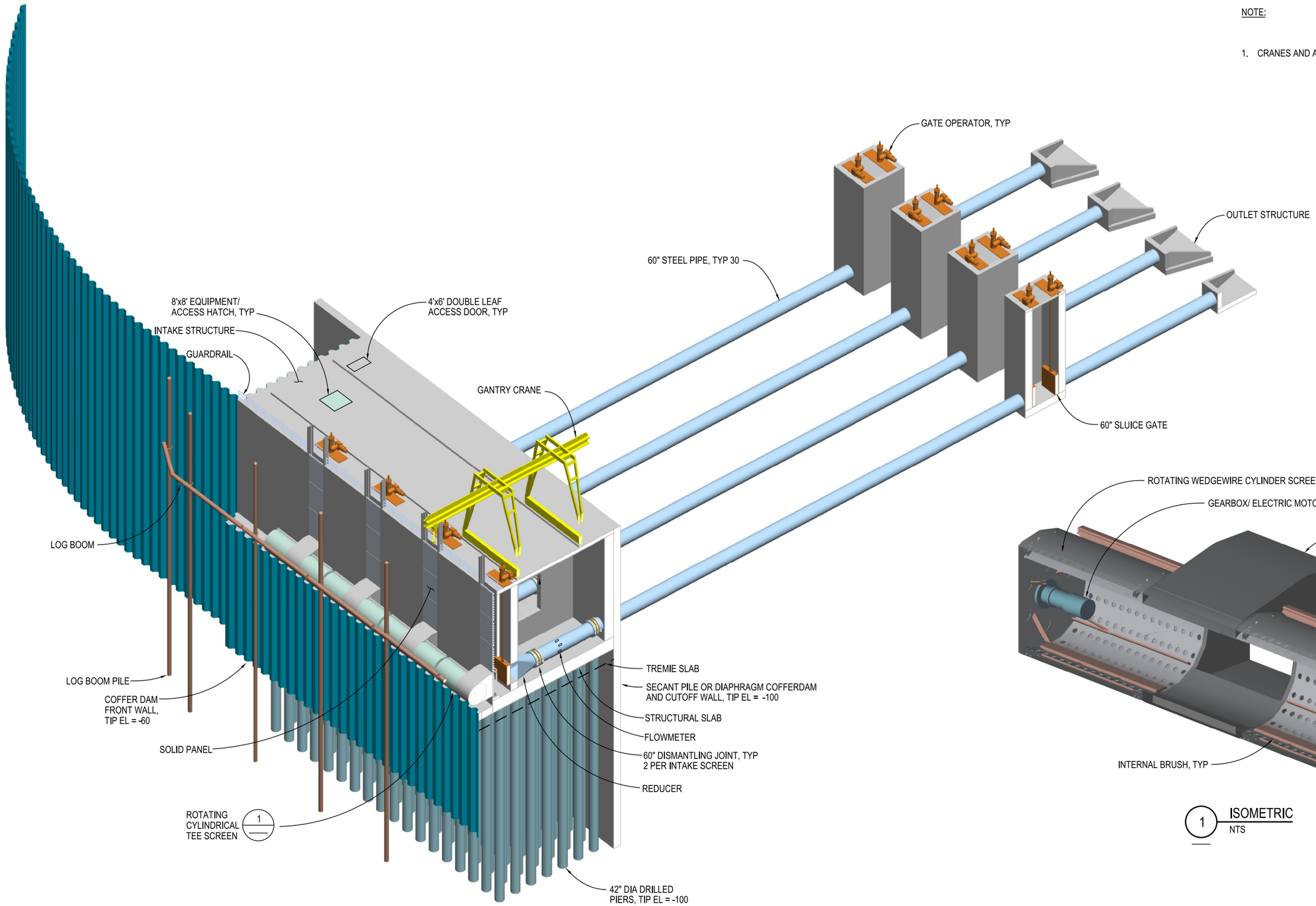

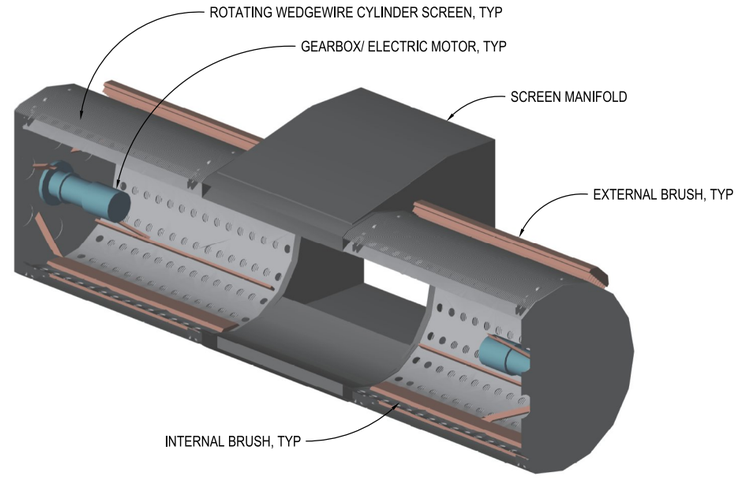

1 ISOMETRIC
NTS

INTAKES

VERIFY SCALE
BAR IS ONE INCH ON ORIGINAL DRAWING.
0 1"

REV	DATE	DESCRIPTION	SUB.	APPD
	SEP 2024	DELTA CONVEYANCE PROJECT CONCEPT ENGINEERING REPORT DRAWINGS		

DESIGNED: J REYNOLDS
DRAWN: J SMITH
CHECKED: J JUNKERT
APPROVAL RECOMMENDED:
APPROVAL BY: A MURDOCK

CONCEPT PLANNING DOCUMENT

NOT FOR CONSTRUCTION

DELTA CONVEYANCE DESIGN & CONSTRUCTION AUTHORITY

DELTA CONVEYANCE PROJECT
CONCEPT ENGINEERING REPORT

TYPICAL TEE SCREEN INTAKE ISOMETRIC

PROJECT NO. W8X97000
SHEET NO. CER-S-9002IT
REV
SEQUENCE NO. 45

CER-S-9002IT_W8X97000.dgn

PLOT DATE:10/7/2024 PLOT TIME:2:53:47 PM

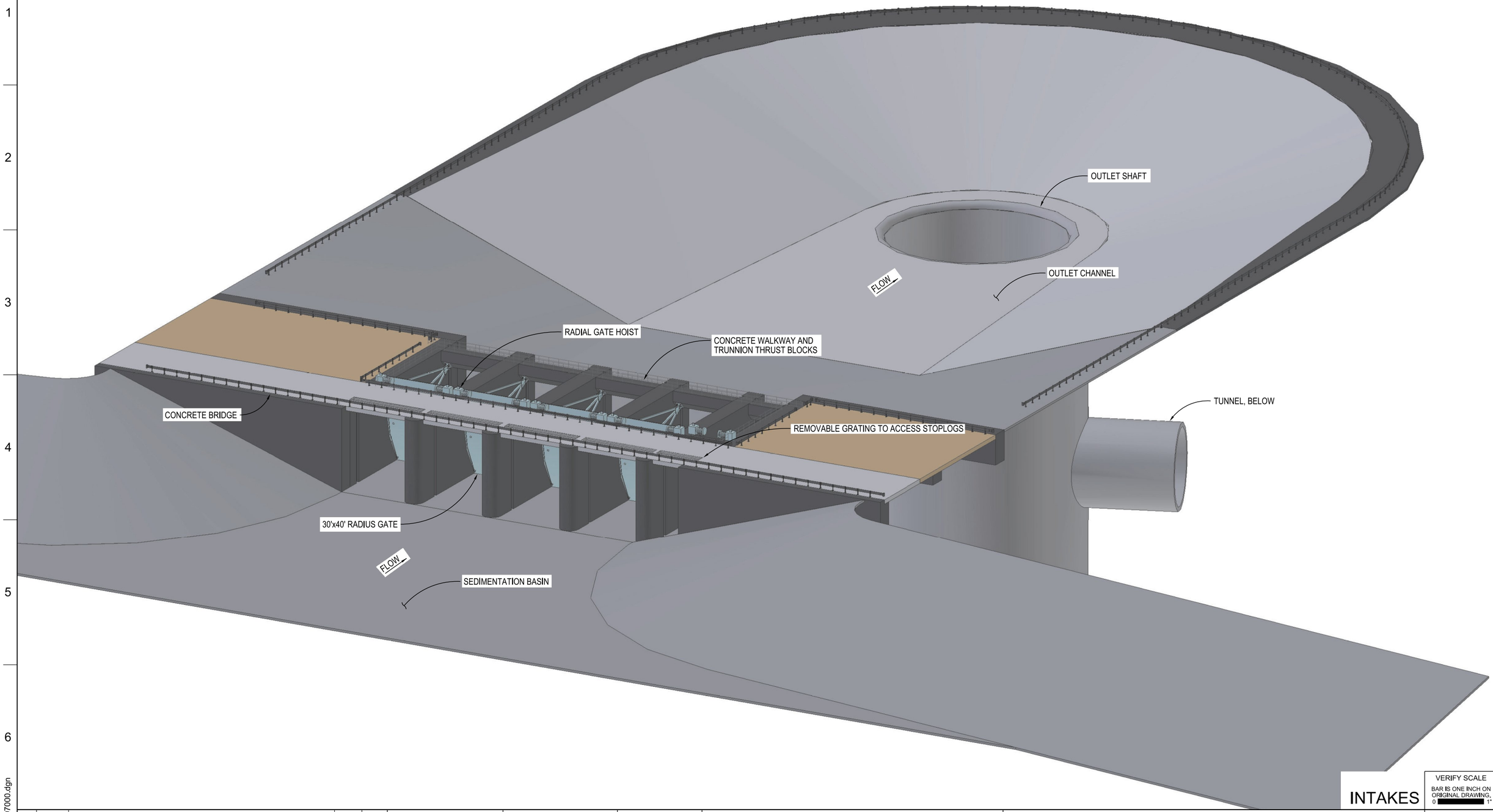

INTAKES

VERIFY SCALE
BAR IS ONE INCH ON ORIGINAL DRAWING.
0 1"

REV	DATE	DESCRIPTION	SUB.	APPD
	SEP 2024	DELTA CONVEYANCE PROJECT CONCEPT ENGINEERING REPORT DRAWINGS		

DESIGNED: J REYNOLDS
DRAWN: J SMITH
CHECKED: J JUNKERT
APPROVAL RECOMMENDED:
APPROVAL BY: A MURDOCK

CONCEPT PLANNING DOCUMENT

NOT FOR CONSTRUCTION

DELTA CONVEYANCE DESIGN & CONSTRUCTION AUTHORITY

DELTA CONVEYANCE PROJECT
CONCEPT ENGINEERING REPORT

INTAKES TYPICAL CANAL AND GATE STRUCTURE ISOMETRIC

PROJECT NO. W8X97000
SHEET NO. CER-S-9003IT
REV
SEQUENCE NO. 46

CER-S-9003IT_W8X97000.dgn

PLOT DATE:10/7/2024 PLOT TIME:2:50:10 PM

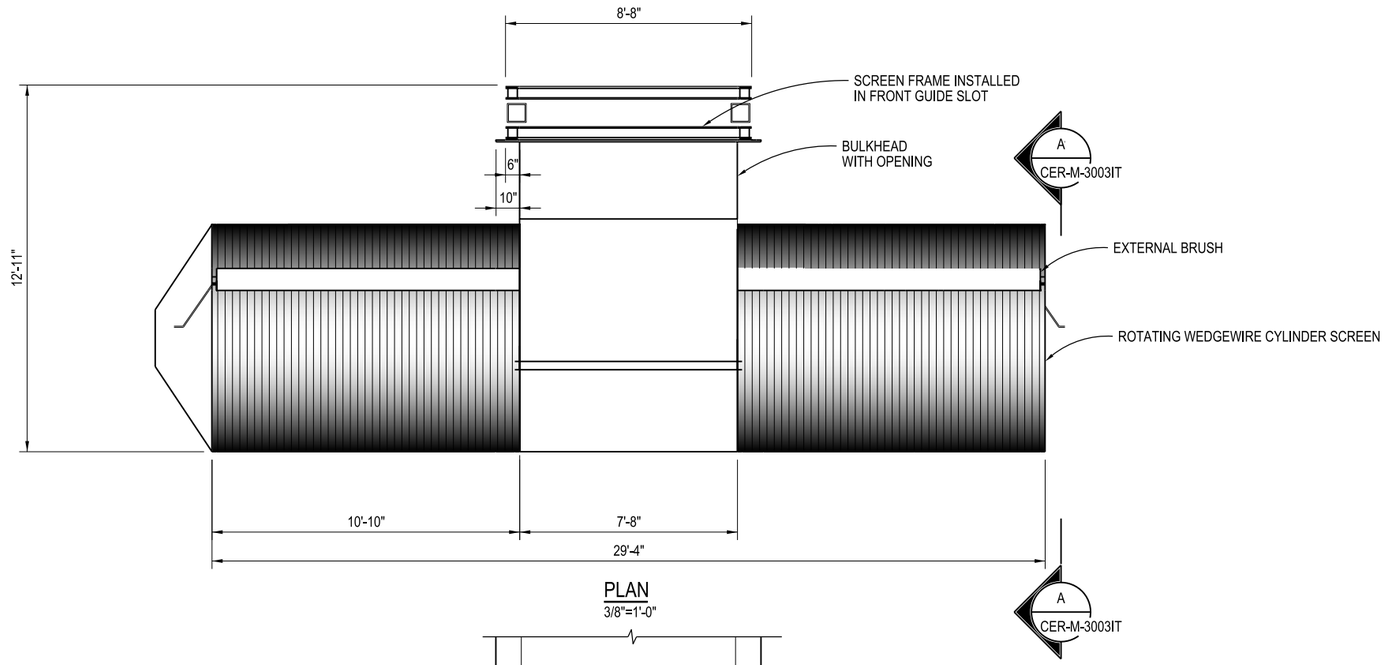

PLAN
3/8"=1'-0"

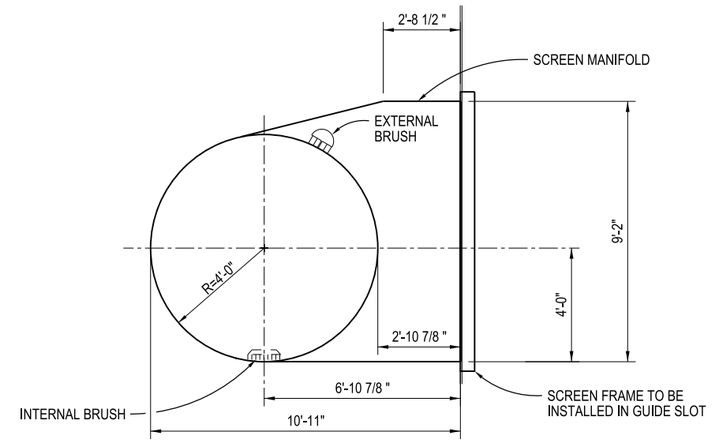

A SECTION
3/8"=1'-0"

NOTE: SCREEN MANIFOLD DIMENSIONS ARE PRILIMINARY.
FINAL DIMENSIONS TO BE DEVELOPED DURING DESIGN PHASE.

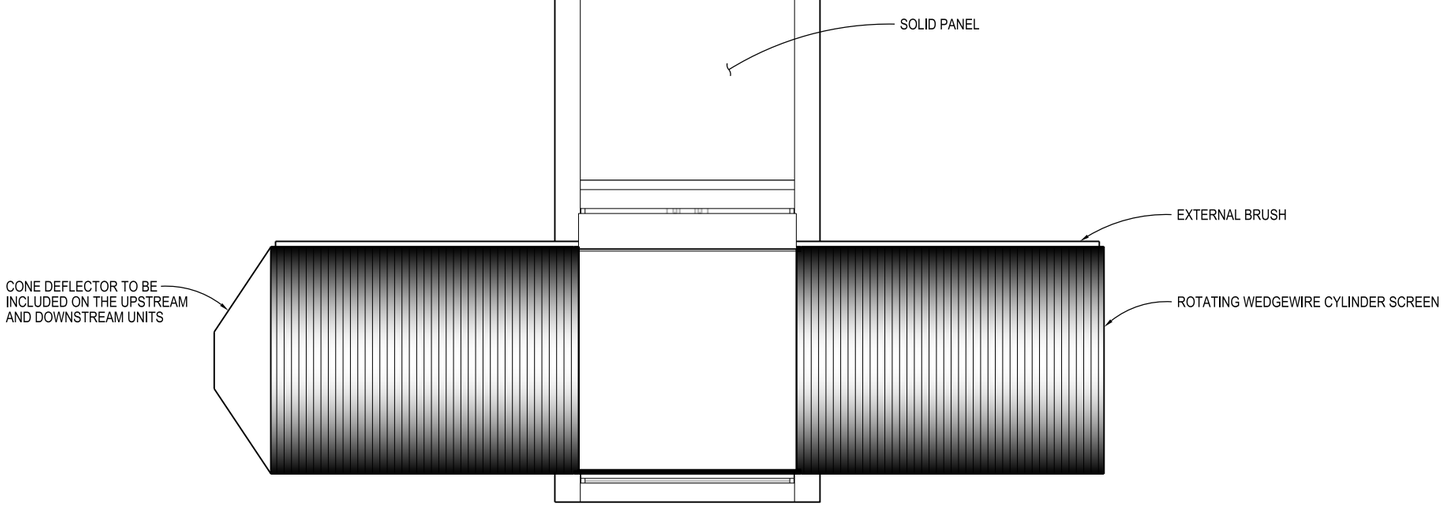

ELEVATION
3/8"=1'-0"

INTAKES

VERIFY SCALE
BAR IS ONE INCH ON ORIGINAL DRAWING.
0 1"

REV	DATE	DESCRIPTION	SUB.	APPD
	SEP 2024	DELTA CONVEYANCE PROJECT CONCEPT ENGINEERING REPORT DRAWINGS		

DESIGNED: J REYNOLDS
DRAWN: J SMITH
CHECKED: J JUNKERT
APPROVAL RECOMMENDED:
APPROVAL BY: A MURDOCK

CONCEPT PLANNING DOCUMENT

NOT FOR CONSTRUCTION

DELTA CONVEYANCE DESIGN & CONSTRUCTION AUTHORITY

DELTA CONVEYANCE PROJECT
CONCEPT ENGINEERING REPORT

INTAKES TEE SCREENS
ELEVATION, SECTION AND PLAN

PROJECT NO. W8X97000
SHEET NO. CER-M-3003IT
REV
SEQUENCE NO. 47

CER-M-3003IT_W8X97000.dgn

PLOT DATE:10/7/2024 PLOT TIME:2:50:34 PM

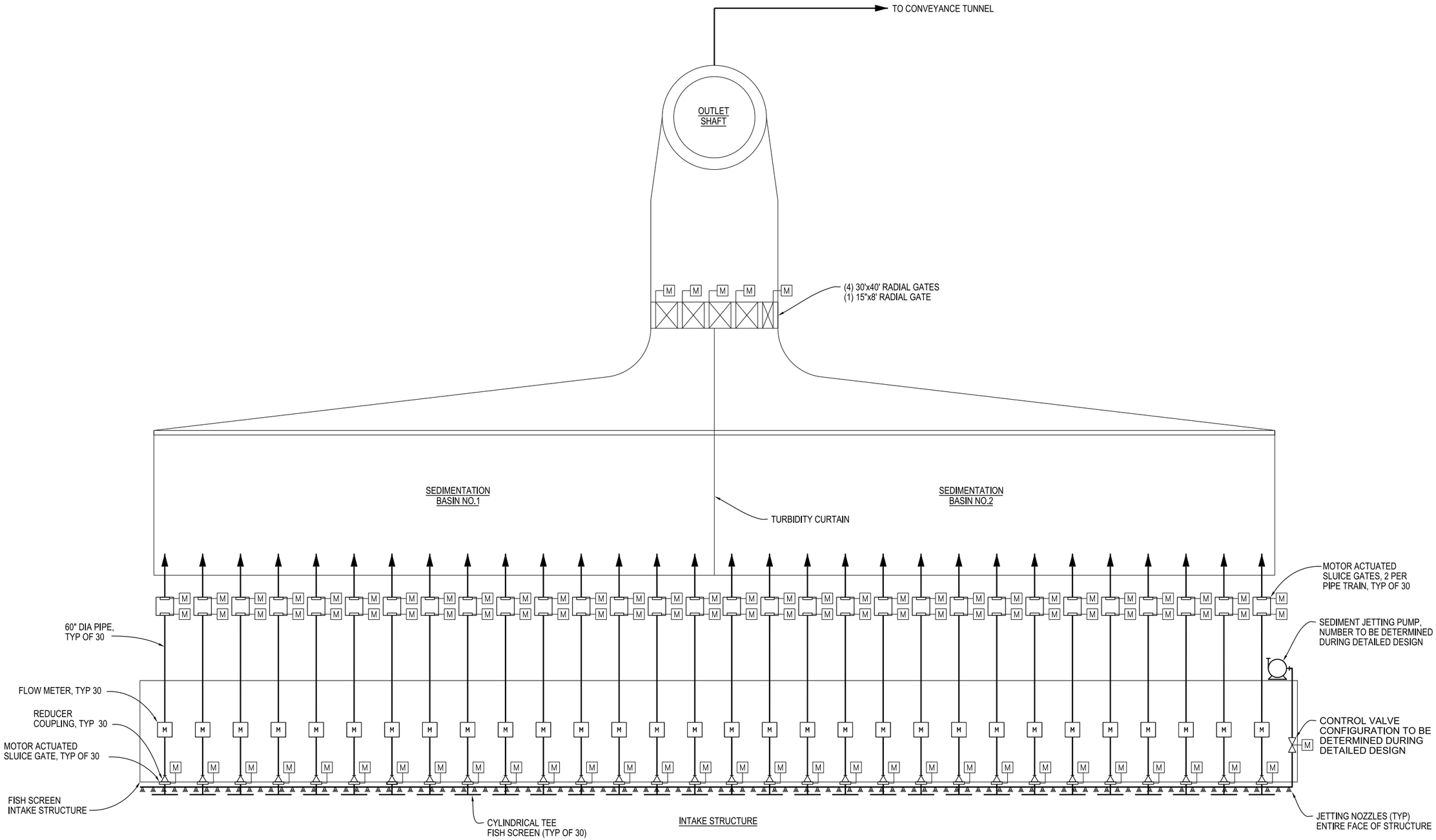

INTAKES

VERIFY SCALE
BAR IS ONE INCH ON ORIGINAL DRAWING.
0 1"

REV	DATE	DESCRIPTION	SUB.	APPD
	SEP 2024	DELTA CONVEYANCE PROJECT CONCEPT ENGINEERING REPORT DRAWINGS		

DESIGNED
DRAWN J SMITH
CHECKED J JUNKERT
APPROVAL RECOMMENDED
APPROVAL BY A MURDOCK

CONCEPT PLANNING DOCUMENT

NOT FOR CONSTRUCTION

DELTA CONVEYANCE DESIGN & CONSTRUCTION AUTHORITY

DELTA CONVEYANCE PROJECT
CONCEPT ENGINEERING REPORT

INTAKES TYPICAL TEE SCREEN PROCESS FLOW DIAGRAM

PROJECT NO. W8X97000
SHEET NO. CER-I-0002IT
REV
SEQUENCE NO. 48

CER-I-0002IT_W8X97000.dgn

PLOT DATE:10/7/2024 PLOT TIME:2:50:24 PM